Environmental Assessment Certificate Application

LNG Canada Export Terminal

Section 2 – Project Overview

October 2014

LNG CANADA

Opportunity for British Columbia. Energy for the world

Joint venture companies

Mitsubishi Corporation

2 PROJECT OVERVIEW

2.1 Proponent Description

LNG Canada is an operating entity established by its four Project Participants: Shell Canada Energy (Shell), Diamond LNG Canada Ltd. (an affiliate of Mitsubishi Corporation), KOGAS Canada LNG Ltd. (an affiliate of Korea Gas Corporation), and Phoenix - LNG Canada Partnership (an affiliate of PetroChina Investment [Hong Kong] Ltd.). Each of the Project Participants is a leader in the global LNG industry:

- Shell has been a global leader in natural gas liquefaction since 1964, with ten LNG projects in operation and two under construction. Shell was a partner in the first-ever purpose built LNG carrier and has been delivering LNG safely for nearly half a century. Today, Shell is one of the largest LNG vessel operators in the world, with interests in around a quarter of the LNG vessels in operation.
- PetroChina is China's largest oil and gas producer and supplier, as well as one of the world's major oilfield service providers and a contractor in engineering construction. PetroChina officially launched three LNG projects in June 2004, two of which started operations in the first half of 2011.
- KOGAS has been South Korea’s principal LNG provider since 1983; it is the world's largest LNG importer, and currently operates three LNG import terminals and a nationwide pipeline network, supplying natural gas from around the world to power generation plants, gas-utility companies and city gas companies throughout the country. KOGAS has also diversified into LNG swapping and trading, and LNG terminal construction, operations and management.
- Mitsubishi is a global integrated business enterprise that develops and operates business across virtually every industry including industrial finance, energy, metals, machinery, chemicals, foods, and environmental business. Since pioneering the first LNG import to Japan from Alaska in 1969, Mitsubishi handles 40% of Japan's LNG imports and has successfully built a portfolio of LNG export investments across Australia, Indonesia, Malaysia, Brunei, Oman, Russia and North America.

LNG Canada is coordinating preparation of approval applications for the Project. If approved, the EAC and operational permits for the Project will be held by LNG Canada, a Canadian corporation based in Vancouver, BC.

The mailing address for LNG Canada:

LNG Canada Development Inc.
595 Burrard Street, PO Box 49162
Vancouver, BC V7X 1J1
Website: www.LNGCanada.ca

All communications regarding the EA for the Project should be sent to the following:

Primary Contact:

Russell Morrison
LNG Canada – Senior Environmental Planner
Telephone: (403) 691-3047
Email: russell.morrison@lngcanada.ca

Alternate Contact:

Tracy Young
LNG Canada – Senior Regulatory Specialist
Telephone: (403) 691-2006
Email: tracy.young@lngcanada.ca

LNG Canada has retained Stantec Consulting Ltd. (Stantec) to manage and prepare the Application for an EAC for the Project. The following is the contact information for Stantec:

Sandra Webster
Stantec – Project Manager
Telephone: (604) 412-2986
Facsimile: (604) 436-3752
Email: sandra.webster@stantec.com

2.1.1 Health, Safety, Security, Environment and Social Performance Policies

LNG Canada works under a Health, Safety, Security, Environment and Social Performance (HSSE&SP) Control Framework that includes corporate commitments to:

- pursue the goal of no harm to people
- protect the environment
- use material and energy efficiently to provide our products and services, and
- respect our neighbours and contribute to the communities in which we operate.

LNG Canada has a systematic approach to HSSE&SP management designed to comply with the law as a minimum requirement and achieve continuous performance improvement, including setting targets for improvement measures, appraising and reporting performance, and requiring contractors to manage HSSE&SP in line with the LNG Canada corporate approach.

2.2 Description of Project

2.2.1 Provincial and Federal Scope

2.2.1.1 Provincial Scope

The scope of the Project to be assessed in the EAC Application is set out in the section 11 Order issued by the EAO on June 6, 2013, and amended by the EAO on August 7, 2013, via a section 13 Order and is comprised of the following two major components:

- the LNG facility and associated activities:
  - a natural gas receiving and LNG production facility that, at full build-out, will produce approximately 26 mtpa of LNG
  - a marine terminal, with a material offloading facility (MOF), able to simultaneously berth two LNG carriers up to 345 m long
  - supporting infrastructure and facilities consisting of upgrades to the existing haul road, modifications to existing water intake and discharge structures, and upgrades to the existing wastewater pipeline, and
  - temporary infrastructure and facilities consisting of workforce accommodation centre(s) and laydown areas.
- related shipping activities:
  - the operation of LNG carriers and other supporting marine traffic along the marine access route between the marine terminal in Kitimat Harbour and the pilot boarding location at or near Triple Island.

2.2.1.2 Federal Scope

Substitution of the federal EA process under CEAA 2012 by the BC EA process under BCEAA was granted by the federal Minister of the Environment. The requirements for a federal review were included in the scope of the assessment defined by the section 11 Order and the section 13 Order.

2.2.2 Purpose of the Project

The purpose of the Project is to convert natural gas into LNG and develop the LNG export industry in BC.

LNG exported from the Project will connect the abundant natural gas resources in the Western Canadian Sedimentary Basin (WCSB) with the growing worldwide demand for LNG, including the Asia-Pacific region. The North American gas market has experienced a dramatic shift in recent years, where North American gas supply now exceeds forecasted long-term demand. . Increased gas production from new gas fields in the United States has substantially reduced the share of the continental gas market served by the WCSB. Unconventional gas plays have also substantially enhanced the resource potential of the WCSB.

The development of an LNG export sector in BC is a major economic goal for the Province and for the Canadian natural gas industry (BCMEM 2012). Introduced by the Ministry of Energy and Mines (MEM) in 2011, the *BC Jobs Plan* set targets for the development of LNG operations. Through the plan, the provincial government has committed to working with LNG export proponents to bring at least one LNG pipeline and terminal online by 2015 and three facilities operating by 2020, assuming all environmental and permitting applications are granted (Government of BC 2011).

The provincial government has promoted this economic strategy with support from the federal government (NRCAN 2013). In 2011, Canada's federal, provincial, and territorial ministers agreed on a federal energy framework with the aim of establishing Canada as a global leader in energy supply, use, and innovation (BCMEM 2012). Relating to BC's Natural Gas Strategy, diversifying international export markets is a key initiative of this national framework.

2.2.3 Project Location

The Project site is located in the District of Kitimat in northwest BC (see Section 1, Figure 1.0-1, Figure 1.0-2, and Figure 1.0-3). Coordinates for the LNG facility are provided in Table 2.2-1. The location (distance by air) is approximately 650 km northwest of Vancouver, 390 km west of Prince George, 115 km east of Prince Rupert, and 60 km south of Terrace. The distance from nearby communities and First Nations Reserves to the LNG facility is listed in Table and to the nearest point along the marine access route is listed in Table 2.2-3.

Table 2.2-1: Coordinates of LNG Facility

Location	UTM (Zone 9U)		WGS-84	
	Easting	Northing	Latitude	Longitude
LNG Processing and Storage Site (Plot Plan Centre)	520537	5986180	54.023482	-128.68652
Marine Terminal	521029	5982954	53.994471	-128.67923
Shell Kitimat Terminal (existing)	520432	5986819	54.029229	-128.68809

Table 2.2-2: Distance of Communities from the LNG Facility

Location	Distance from LNG Facility by grid coordinates (km)
Service Centre of Kitimat	4
Residential areas of Kitimat	3.3
Kitamaat Village (Haisla Nation)	6
Kitselas (Kitselas First Nation)	53
Kitsumkalum (Kitsumkalum First Nation)	56
Terrace	60
Hartley Bay (Gitg'at First Nation)	78
Kitkatla (Gitxaala Nation)	220
Prince Rupert	115
Prince George	390
Vancouver	650

Table 2.2-3: Distance of First Nations Reserves from the Marine Access Route

First Nation Reserve	Distance from the Marine Access Route (km)
Henderson's Ranch (Haisla Nation)	1.8
Kitamaat (Haisla Nation)	2.6
Walth (Haisla Nation)	2.6
Bees (Haisla Nation)	1.9
Kitasa (Haisla Nation)	2.5
Kitkahta (Gitg'at First Nation)	5.4
Kulkayu (Gitg'at First Nation)	2.9
Gribble Island (Gitg'at First Nation)	3.8
Turtle Point (Gitg'at First Nation)	4.5
Lachhul-jeets (Gitg'at First Nation)	1.8
Kunhunoan (Gitg'at First Nation)	2.1
Citeyats (Gitxaala Nation)	2.0
Kitlawaoo (Gitxaala Nation)	5.2
Keecha (Gitxaala Nation)	3.7
Kooryet (Gitxaala Nation)	2.3
Keswar (Gitxaala Nation)	2.7
Rushton Island (Metlakatla)	3.3

The Project will be located on approximately 430 ha in the District of Kitimat. Approximately 10% of the LNG processing and storage site was previously developed for methanol production, storage, and transshipment (former Methanex Corporation facility), and for condensate transshipment (Cenovus Energy Inc.). The Project location is within lands zoned for industrial use. A Phase II Environmental Site Assessment is currently being completed on the Methanex site. Identified contamination will be managed in accordance with regulations. Potential lands to hold temporary workforce accommodation centre(s) have been identified north of the existing Rio Tinto Alcan (RTA) facility (adjacent to the proposed LNG processing and storage site) and also at the existing Sandhill Materials and Arthon Industries Limited (Sandhill Materials) site located approximately 2 km northeast of the LNG processing and storage site.

The proposed location for the marine terminal is in the private port of Kitimat. The marine terminal involves modifying the existing RTA Wharf “B” (former Eurocan Pulp and Paper wharf) to accommodate two LNG carriers and a MOF. A schematic view of the Project is shown in Figure 1.0-3. An LNG loading and circulation system will interconnect the LNG processing and storage site with the marine terminal.

As shown on Figure 1.0-2, the LNG Canada marine access route to the port of Kitimat will start near the Triple Island Pilotage Station where BC Coast Pilots board the LNG Canada vessels, and will continue south through Principe Channel, and then angle east and northeast into Douglas Channel to Kitimat Arm. During operation, it is anticipated that there will be between 170 and 350 LNG carrier visits per year, depending on the size of the carriers.

2.2.4 Project History

LNG Canada initiated feasibility studies on construction and operation of an LNG production facility and terminal in 2010/2011. Early work involved an extensive screening of potential sites. LNG Canada reviewed over 500 sites in BC, from the Lower Mainland to the northwest corner of the province, prior to selecting Kitimat as a preferred site. In 2011 work was initiated to develop the Project concept and start discussions with potentially affected Aboriginal Groups and various stakeholders.

In 2012, LNG Canada entered into a commercial agreement with Coastal GasLink Pipeline Limited (Coastal GasLink), a subsidiary of TransCanada PipeLines Limited, under which Coastal GasLink will permit, build, own, and operate a pipeline that will deliver WCSB natural gas from northeastern BC to the Kitimat area. Approvals required in support of the pipeline development will be obtained by Coastal GasLink.

The lands required for the Project include the Shell Kitimat Terminal purchased from Cenovus in October 2011 (former Methanex Corporation facility), and specific lands owned by RTA and Sandhill Materials. In February 2014, LNG Canada entered into an option agreement with RTA to purchase or lease specific land and the marine terminal for the Project. In May 2014, LNG Canada entered into a commercial

arrangement with Sandhill Materials for lands approximately 2 km north of the LNG processing and storage site for a potential workforce accommodation centre site.

In March 2013, LNG Canada filed its Project Description for the LNG Canada Export Terminal, announcing the Project and the requirement for an EAC Application. In June 2013, a section 11 Order was issued for the Project outlining the scope of the EA. The section 11 Order was revised by a section 13 Order in August 2013. In February 2014, the AIR for the Project was issued by the EAO, which identified the information required in the Application under BCEAA and CEAA 2012.

LNG Canada has undertaken the following steps to define the Project and provide information in support of the EAC Application:

- continued refinement of marine and land-based alternatives for the LNG facility location and marine terminal
- continued refinement of all on-land infrastructure, including road and temporary workforce accommodation centre(s)
- continued engagement and consultation with Aboriginal Groups, stakeholders and municipalities
- continued involvement in the EAO Working Group meetings
- opened a Community Information Centre in Kitimat
- continued studies of the local marine and terrestrial environment, and
- conducted land-use and socio-economic studies of the communities near the Project site.

A discussion of changes made to Project design based on feedback obtained from government agencies, Aboriginal Groups, stakeholders, and the general public is presented in Section 2.2.7.

2.2.5 Project Components

The Project will consist of the following major components, all located in BC:

- LNG facility including:
  - natural gas inlet station
  - natural gas liquefaction trains, comprising of gas treatment and liquefaction facilities
  - LNG storage tanks
  - LNG loading and circulation system connecting the LNG processing and storage site with the marine terminal
  - marine terminal with MOF, and two LNG berths able to simultaneously accommodate two LNG carriers with lengths up to 345 m, and
  - utilities, including the following:

        - cooling water supply, treatment and return, and
        - power supply.
    - services (e.g., nitrogen, instrument air, fire water, potable water, sewers)
    - refrigerant component (ethane, propane) storage tank
    - condensate processing, storage and rail loading facilities
    - buildings (office, workshop, warehouse), roads and other site infrastructure, and
    - temporary infrastructure and facilities, including temporary laydown and assembly areas, staging areas, workforce accommodation centre, and an early offloading facility (EOF) at the marine terminal.
- Related shipping activities including:
    - LNG carriers and other supporting marine traffic along the marine access route, and
    - temporary operation of construction vessels, including tugs, barges, cranes for construction, dredging equipment and support craft.

Key components of the Project are listed in Table 2.2-4.

Table 2.2-4: Physical Components of the Project

Project Feature	Components
LNG processing and storage site	▪ Natural gas inlet station (feed gas) ▪ Natural gas treatment equipment to remove impurities from the feed gas (including carbon dioxide [CO_2], sulphur compounds, water, mercury [if present], and natural gas liquids in the form of condensate) ▪ Storage tanks for condensate and infrastructure for staging and loading condensate into rail cars ▪ LNG production capacity of approximately 26 mtpa (at full build-out) ▪ Liquefaction refrigerant storage (ethane, propane) ▪ Minimum of two and up to four natural gas liquefaction trains with natural gas-powered refrigeration compressors ▪ Two 225,000 m^3 LNG storage tanks, for a total storage capacity of 450,000 m^3 ▪ Freshwater cooling towers (using freshwater from Kitimat River) ▪ Flare systems ▪ Fire water system ▪ Administration and control buildings, maintenance workshops, warehouse and laydown areas ▪ Waste solids collection and disposal ▪ Wastewater (effluent) collection and treatment ▪ Site stormwater management system
LNG loading and circulation system	▪ LNG loading and circulation system between the LNG processing and storage site and the marine terminal

Project Feature	Components
Marine terminal	▪ Marine terminal with MOF, and two berths able to simultaneously accommodate two LNG carriers with lengths up to 345 m ▪ The marine terminal includes modifications to the existing RTA Wharf "B" (former Eurocan wharf) ▪ The marine terminal includes loading and vapour return piping, LNG loading arms, and associated infrastructure. The planned maximum LNG carrier loading rate will be 12,000 m^3/h ▪ Dredged berth areas to provide sufficient water depth for safe approach, berthing of LNG carriers, and operation of the MOF
Supporting infrastructure and facilities	▪ Existing access road upgrades to accommodate larger loads ▪ Modifications to existing railway tracks (within footprint) ▪ Replacement of the existing water intake infrastructure on Kitimat River and a water pipeline to the LNG facility site ▪ Replacement of the existing wastewater pipeline to Kitimat Arm ▪ Infrastructure for the import of power to the LNG facility site and marine terminal
Temporary infrastructure and facilities	▪ Temporary workforce accommodation centre(s) and access roads ▪ Additional temporary laydown areas and offloading facilities ▪ Construction offices ▪ Temporary construction utilities ▪ Temporary EOF at the marine terminal

Completion of all four natural gas liquefaction trains will constitute full build-out. The Project is being assessed assuming full build-out.

2.2.5.1 LNG Facility Layout

The engineering philosophy for the Project is to design the site to limit interaction with the surrounding environment and to protect the safety of workers, industrial neighbours, and nearby communities. The site plan has evolved during pre-front end engineering design (pre-FEED) in response to increased knowledge of the surrounding environment and input from Aboriginal Groups and key stakeholders. The site plan will be further refined in FEED which is currently underway.

The site plan (Figure 2.2-1) incorporates the components of the full build-out, including four natural gas liquefaction trains, two LNG storage tanks, two condensate storage tanks, and two LNG loading berths at the marine terminal. The location of each Project component will be finalized during FEED. The central control room and administrative service buildings area are currently planned at the north end of the LNG processing and storage site. The LNG processing and storage site, including the LNG and condensate storage tanks, will be surrounded by a bund wall to protect the site from flooding. Within the bunded perimeter, the elevation of the site will be terraced to limit the extent of infilling required. Bunds may also surround the LNG loading and circulation system with breaks in the bunds to allow wildlife passage and freshwater and tidal flows. Design options for the LNG loading line will be assessed during FEED and will

consider disturbance, wildlife passage and requirements for potential spill containment in the final design. Additional clearing of trees may be required outside the perimeter of the LNG facility (but within the Project footprint as shown on Figure 1.0-3) for safety reasons. The need for and extent of additional tree clearing will be determined based on a quantitative risk assessment (QRA) to be undertaken by LNG Canada as part of FEED. The assessment takes a conservative approach and assumes tree clearing throughout the area of potential tree clearing (Figure 2.2-1). As such, the entire Project footprint is considered disturbed in the assessment.

The Coastal GasLink pipeline carrying the feed gas will enter the site through a gas inlet station in the east-northeast of the facility site. Coastal GasLink is proposing a metering station approximately 5 km upstream of the LNG processing and storage site.

Potential temporary workforce accommodation centre lands are located immediately north of the RTA site adjacent to the west side of the LNG processing and storage site, and approximately 2 km northwest of the LNG processing and storage site (Figure 2.2-1). The extent of workforce accommodation centre lands required for the Project will be refined through further Project planning. All potential workforce accommodation lands are included in the assessment.

Climatic and seismic conditions will be considered during design and construction material selection.

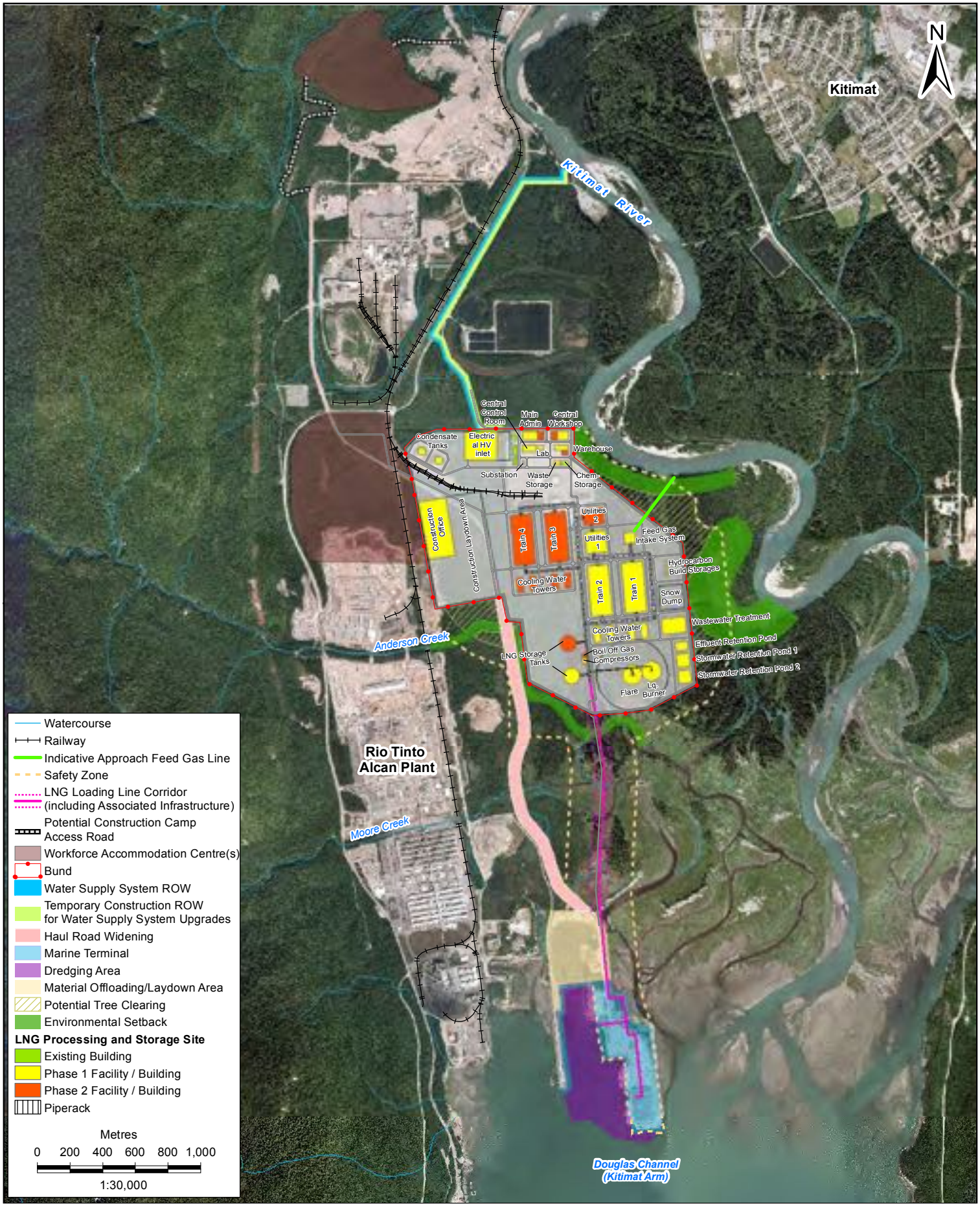

Stantec

LNG CANADA
Opportunity for British Columbia. Energy for the world

ENVIRONMENTAL EFFECTS ASSESSMENT
PROPOSED PROJECT OVERVIEW

DETAILED PROJECT SITE PLAN

LNG CANADA EXPORT TERMINAL
KITIMAT, BRITISH COLUMBIA

PROJECTION	DRAWN BY
UTM9	SHS
DATUM	CHECKED BY
NAD 83	SW
DATE	FIGURE NO.
22-AUG-14	**2.2-1**

8/22/2014 - 10:16:59 AM V:\1231\active\EM\123110458\gis\figures\EA\section_2_proposed_project_overview\fig_10458_ea_overview_2.2-1_detailed_project_site_plan.mxd

2.2.5.2 LNG Processing and Storage

Natural gas received at the facility is processed in natural gas liquefaction trains, where natural gas liquids (condensate) and impurities (e.g., water) are removed and the remaining natural gas is converted into LNG through liquefaction and transferred into storage tanks. The LNG is then moved via a loading line onto LNG transport ships (LNG carriers) at the marine terminal (Section 2.2.5.9).

Figure 2.2-1 shows the location of the four natural gas liquefaction trains at the centre of the LNG processing and storage site. A block diagram of the first two natural gas liquefaction trains is shown in Figure 2.2-2. The diagram shows two parallel natural gas liquefaction trains, common infrastructure, buildings, and other facilities that are within the LNG processing and storage site. Subsequent phases would be similar with the addition of one or two additional trains in a format similar to the first phase.

Natural gas will enter the natural gas liquefaction trains through the gas inlet station (referred to as feed gas). The feed gas will contain acid gases and other components such as carbon dioxide (CO_2), sulphur compounds, water, mercury (if present), and heavier-weight hydrocarbons (collectively referred to as condensate), that may not meet LNG process specifications. To meet these specifications, the units described in the following sections will remove (or reduce to allowable levels) the undesired components from the natural gas before liquefaction.

2.2.5.2.1 Acid Gas Removal Unit

The primary purpose of the acid gas removal unit is to remove impurities in the gas stream to prevent freezing out and blockage in the liquefaction unit. The acid gas is primarily comprised of CO_2; however, other components include traces of benzene, toluene, ethylbenzene and xylenes (BTEX), and sulphur compounds. Collectively all these components are referred to as acid gas. The acid gas is then sent to an incineration unit. The acid gas removal unit consists of three sections:

- absorber section, designed to a Sulfinol-D or similar solvent
- regenerator section
- acid gas incinerator, and
- solvent storage.

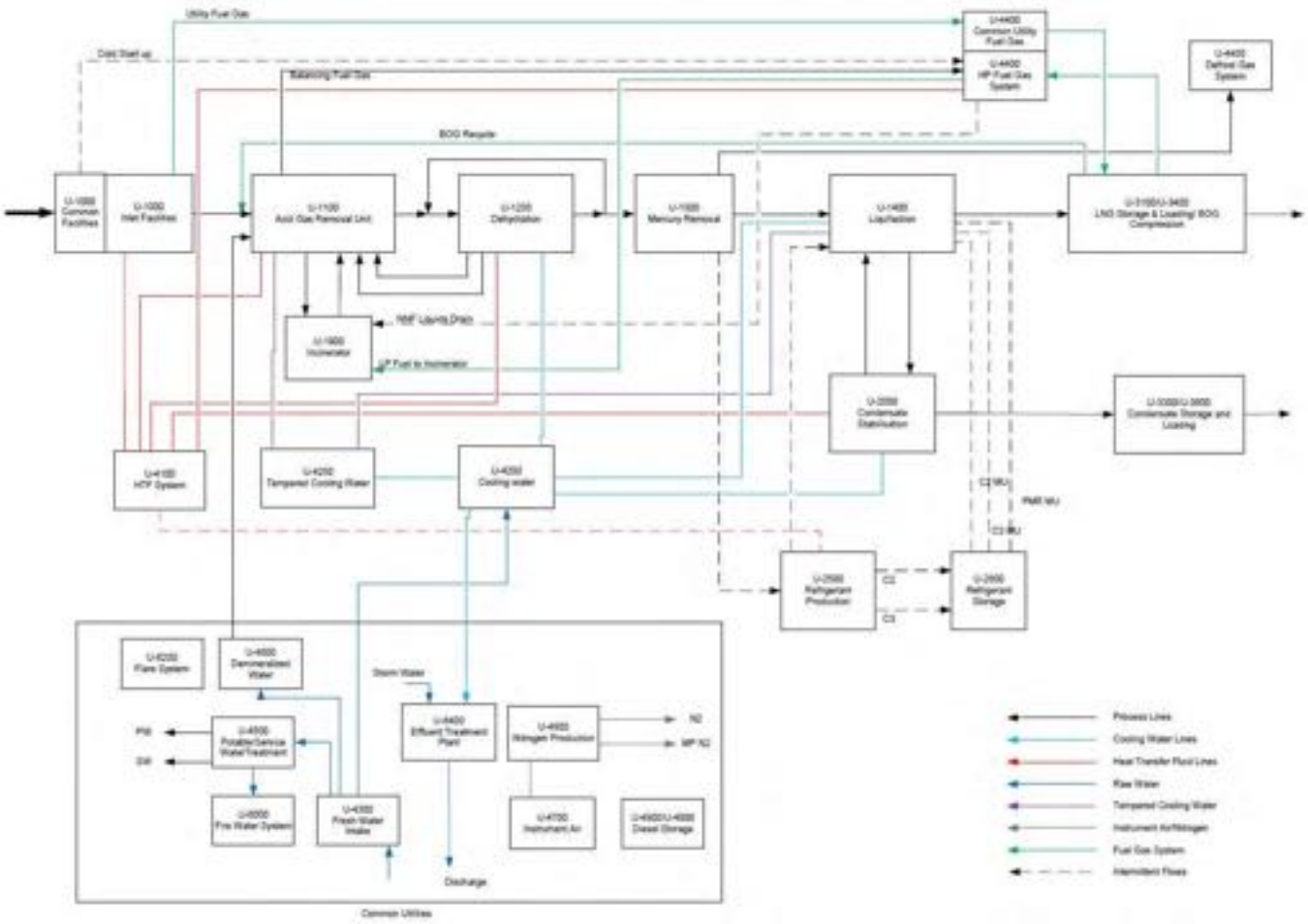

Figure 2.2-2: Phase 1 Natural Gas Liquefaction Trains

2.2.5.2.2 Gas Dehydration and Hg Removal

Gas exiting the acid gas removal unit is saturated with water. The purpose of the dehydration unit is to remove water from the gas to levels below one part per million by volume. This is to prevent freezing in the downstream liquefaction equipment. This unit uses pressure vessels filled with desiccants to absorb the water. Condensed wastewater from the vessels will be treated onsite, reused for other processes where possible, or discharged to the marine waters of Kitimat Arm when meeting specifications for discharge.

The primary purpose of the Hg removal unit is to safely extract the trace amounts of elemental mercury (Hg) that may be present in the feed gas. Elemental Hg can cause, under certain circumstances (such as defrosting of equipment in cryogenic service), rapid corrosion of aluminum equipment in the liquefaction unit. To prevent corrosion, the Hg removal unit extracts virtually all elemental Hg that may be present in the gas. The Hg removal bed has a lifetime of not less than four years. If at some point the adsorbent in the Hg removal bed can no longer meet the specifications, it will be disposed in accordance with applicable regulations at an approved disposal facility.

2.2.5.2.3 Liquefaction Unit

The dry natural gas from the Hg removal unit is further processed in the liquefaction unit to produce LNG. The process includes removal of heavier hydrocarbons through the Shell double mixed refrigerant (DMR) liquefaction process. The DMR process cools the gas stream in heat exchangers where it is converted into LNG at high pressure.

The precool mixed refrigerant, a mixture of mainly ethane and propane, precools both the natural gas and the liquefaction mixed refrigerant to approximately -50°C. In the precool heat exchangers, part of the natural gas is liquefied; these liquids are removed and routed to the condensate stabilization unit.

The LNG leaving the main cryogenic heat exchanger will be under pressure. The pressure in the stream is reduced through a liquid expander. The resulting LNG is sent to the LNG storage tanks and stored at -161°C.

2.2.5.2.4 Condensate Stabilization Unit

The condensate stabilization unit stabilizes the condensate (mainly pentanes and hexanes) generated in the liquefaction unit.

The condensate stabilization unit receives cold, high pressure liquids from the liquefaction unit. The liquids are stabilized in a fractionating column called the condensate stabilization column. The bottom product is cooled by a cooler and is transferred to the condensate storage tanks by a pressure gradient.

It is estimated (based on the anticipated feed gas quality) that condensate will be produced at a rate of approximately 400 m^3 per day at full build-out.

2.2.5.2.5 Common and In-train Utilities

The LNG facility will be supported by common utility units providing treated water, demineralized water, instrument air, and nitrogen. In-train utility units will provide fuel gas, heat transfer fluid, cooling water, and tempered cooling water. Other facilities that will be common to all of the natural gas liquefaction trains include the fire water system, the pressure relief and liquid disposal unit, and the drainage and effluent treatment facility.

The cooling water towers will use water from Kitimat River to absorb heat generated with LNG production. The resultant warm water will be cooled again by being re-circulated back through the towers. The selected design will include anti-pluming technology that will serve to reduce visible water vapour. The estimated water demand is up to 70,000 m^3/day (approximately 3,000 m^3/h) at full build-out, which includes an estimated 15,000 m^3/day for each natural gas liquefaction train plus water for use in other facility processes. Approximately 80% to 85% of this water is expected to evaporate, and the remaining water (which will contain the natural minerals from the original volume) is proposed to be tested and treated as necessary and discharged to marine waters near the marine terminal.

2.2.5.2.6 Storage Tanks

The Project will include storage tanks for both LNG and condensate.

At full build-out, the Project will have up to two 225,000 m^3 LNG storage tanks for a total storage capacity of 450,000 m^3 of LNG. It is expected that Phase 1 (natural gas liquefaction train 1 and train 2) will have one tank. A second tank will be constructed as part of full build-out. The two LNG storage tanks are proposed to be located in the southwest corner of the processing and storage site (Figure 2.2-1). The location of the tanks will be finalized during FEED. The contents of the LNG storage tanks will be kept at an average temperature of -161°C. The type of LNG storage tank will be defined during FEED, and will likely consist of a concrete outer tank with either an independent steel inner tank or an appropriate inner membrane as primary containment. The tanks will be designed in accordance with relevant regulations/standards.

Condensate will be stored in two fixed cone roof storage tanks with floating internal roofs expected to be located at the northwest corner of the LNG processing and storage site. Each tank capacity is estimated to be 10,000 m^3. The LNG facility is expected to produce condensate at an average rate of 400 m^3 per day (based on anticipated gas quality) which will be transported to market by rail. A loading facility with integrated vapour return line and an approximate loading rate of 200 m^3/h to 400 m^3/h will be constructed at the LNG processing and storage site.

In addition to storage tanks for LNG, storage facilities for refrigerants and other process materials and products will be required.

Climatic and seismic conditions will be considered during design and construction material selection for all storage tanks.

Condensate Transport to Market

CN Rail currently has three scheduled trains per week servicing Kitimat, pulling various types of cars and cargo. It is anticipated that condensate export from the Project will not increase the number of trains per week because the condensate cars will attach to the existing trains. Existing onsite rail will be modified or replaced as required.

2.2.5.2.7 Flare System

The pressure relief and liquid disposal system (flare system) is an important component of the LNG facility's safety system. The purpose of the flare system is to collect and dispose of hydrocarbon containing streams in a controlled manner that are released during start-up, shutdown, upset, and emergency conditions. The flare system consists of the following subsystems:

- Flare Derrick
  - warm wet flare and relief system; emergency/operational system for warm, heavy, wet streams
  - cold dry flare and relief system; emergency/operational system for high-pressure, cold, light, dry streams
  - operational flare
  - storage and loading flare relief system; emergency/operational system for low-pressure streams from LNG storage and loading, as well as inert gas disposal, and
  - spare flare.
- Liquid Burner Derrick
  - hydrocarbon liquid disposal facilities.

The flare derricks are located south of the natural gas liquefaction trains 1 and 2 (Figure 2.2-1) to take advantage of the interconnecting lines between the natural gas liquefaction trains, the LNG storage tanks, and the marine terminal. The flare derricks are located within the site footprint to maintain the largest possible buffer from both Kitimat and the RTA site, and to maintain maximum allowable heat radiation limits within the site boundary during normal operations. Final locations of the flare and liquid burner derricks will be determined during FEED. The flare derrick will have an approximate height of 125 m, and width of 10 m (dimensions to be confirmed during FEED). Each flare stack will have a diameter of

approximately 1.6 m. There will be a continuously operational flare pilot. Controlled flaring is expected to have a flare height of between 10 m to 30 m. The maximum flare height is anticipated to be approximately 60 m during a major plant upset condition. Flares will have minimum destruction efficiency of 99.53%. The liquid burner derrick will have a height of approximately 60 m.

2.2.5.3 LNG Loading

The LNG loading and circulation system continues south from the LNG processing and storage site to the marine terminal. Two parallel loading lines will run within an approximately 100 m wide corridor to the marine terminal. The lines will include liquid loading and vapour return. When not loading LNG onto carriers, one pump will circulate LNG in the loading lines to maintain their low temperature.

The loading lines will be supported on an elevated pipe rack structure to keep them above maximum flood levels. The area under the rack may have low bund containment. The corridor may be fenced to control access and will also contain a maintenance access road, wastewater line, water and firewater line, and electrical cables. The configuration and layout of the final corridor will be determined during FEED. A conservative approach with the greatest disturbance footprint has been used in the assessment.

As shown on Figure 2.2-1, the intention is to have several breaks in the bund and fence system (along the loading line right-of-way) to allow wildlife passage and freshwater and tidal flows underneath the loading lines, pending approval through permitting.

As with other Project components, the LNG loading and circulation system will be constructed in phases.

LNG from the storage tanks will travel to the marine terminal through two loading lines and will be loaded into the carrier by marine loading arms at a rate of 12,000 m^3/h. Vapour from the LNG carrier will be transported back to the facility through a vapour return line.

2.2.5.4 Permanent Support Facilities

The Project will require installation of permanent administrative offices and other supporting structures (e.g., maintenance facilities). Permanent support facilities include:

- office buildings and control-room facilities, designed to meet the requirements of full build-out
- workshops, warehouse, water intake building, chemical store, laboratory, first aid supplies/ equipment and firefighting facilities housed in basic buildings to meet the requirements of full build-out
- waste management facilities including water and effluent treatment facilities for process runoff and treatment of solid process wastes (e.g., dewatered sludge), and
- upgrades to the existing haul road between the LNG processing and storage site and the marine terminal.

2.2.5.5 Waste Management

Construction, commissioning, and operation emissions, discharges and wastes will be managed in compliance with applicable policies and regulations.

Anticipated air emissions include:

- particulate matter (PM)
- greenhouse gases
- carbon monoxide (CO), sulphur oxides (SO_X), and nitrogen oxides (NO_X), and
- fugitive hydrocarbons.

Anticipated liquid wastes or effluent streams include:

- domestic effluent, or sewage, from the workforce accommodation centre(s), construction offices, and permanent buildings on-site
- blowdown (wastewater) from the cooling towers
- stormwater runoff
- miscellaneous effluents including those from drips and drains, and
- allowable ballast water discharges (in accordance with legislation and best management practices).

All wastewater and effluent streams from the on-land and marine terminal facilities that require treatment prior to discharge will be routed to the effluent treatment system. The treatment system will include buffer and off-spec tanks, a sand and grease separator, a biotreater, continuous backwash sand filter, and sludge dewatering facilities. Treated effluent will be discharged into Kitimat Arm. Dewatered sludge will be combined with sludges from the sand and grease trap, and will be stored for off-site disposal.

All onsite wastewater will be directed to two or more holding basins located in the southeast corner of the LNG processing and storage site, at the lowest elevation area in the site. One (or more) will serve as a holding area for stormwater runoff. Its location at low elevation allows gravity drainage of stormwater runoff within the site boundary. During construction, additional temporary holding ponds for stormwater runoff will likely be required due to grading and addition of fill to the site. Stormwater runoff, if it meets regulatory discharge requirements, may be directed toward either Kitimat River or Kitimat Arm during the construction phase. The second holding basin will contain potentially contaminated wastewater from the water treatment plant and cooling tower blowdown. Wastewater will be treated and tested before being discharged by pipeline to Kitimat Arm at the end of the marine terminal. No Project-related wastewater is expected to be discharged into Kitimat River during operation. All wastewater discharges will be managed under an appropriate regulatory permit.

Anticipated solid wastes during construction include:

- contaminated soil or materials excavated from the Project footprint
- dredged material from the berth pocket
- solid wastes from shipment of Project components, including packing materials
- solid wastes from construction of Project components, including the marine terminal, and
- solid municipal or industrial wastes from the workforce accommodation centre.

Anticipated solid wastes during operation include:

- solid wastes from LNG processes (e.g., dewatered sludge, spent catalyst)
- solid municipal and industrial wastes from LNG facility operation and maintenance, and
- solid wastes from LNG carriers including plastic, ash, and packaging materials.

Solid waste, or sludge, resulting from the LNG processes will be generated by the effluent treatment system. Treatment objectives for sludge is the reduction of sludge volume by dewatering, rendering it suitable for disposal. Oily sludge will be dewatered using a flocculation-flotation unit. Non-oily sludge will be dewatered using a biotreater. The resultant sludge will be sent to a third-party site for disposal in accordance with local regulations.

The disposal methods for solid Project wastes are being evaluated. Options include municipal waste disposal at the local District of Kitimat landfill, recycling, and industrial or contaminated waste disposal at a licensed waste management facility located elsewhere (contracted removal by rail car, truck or barge).

Dredged sediments that do not meet the screening criteria for disposal at sea will be disposed of on land as infill or transferred to an approved landfill location. Options for disposal of dredged material that meet the screening criteria for disposal at sea are still under consideration (see Section 2.3.4).

Hazardous wastes produced during operation potentially include:

- solvents or hydrocarbons from contaminated wastewater
- trace Hg, removed by the Hg removal unit during treatment of the natural gas
- waste catalysts and adsorbents, including filters
- waste lubricating oils
- spent solvents, and
- biological sludge.

All hazardous wastes will be managed separately from other solid and liquid wastes. They will be stored onsite in approved containers and disposed of at a licensed facility by licensed contractors. Transportation of hazardous wastes will be done in compliance with the *Transportation of Dangerous Goods Act* and Regulations.

2.2.5.6 Power Supply

Each natural gas liquefaction train will use natural gas-powered direct drive turbines to provide the mechanical power required for the main refrigeration compressors.

In addition, the LNG facility and marine terminal will require electrical power to operate all other supporting facilities and infrastructure. Approximately 120 MW of electrical power will be required for Phase 1 (trains 1 and 2) and approximately 235 MW will be required at full build-out; this power will be sourced from the BC Hydro grid. See Section 2.3.3 for a discussion of alternatives considered for power supply.

2.2.5.7 Water Supply System

Freshwater will be required for drinking (potable) water, process water (demineralized water), cooling water systems, fire water, and service water. The overall water consumption of the Project is estimated to be approximately 3,000 m^3/h at full build-out and will be sourced from Kitimat River. Water from Kitimat River will be treated onsite to provide potable water for the workforce accommodation, temporary construction and operations administrative facilities.

The Project will include a water supply system with intake from Kitimat River north of the LNG processing and storage site. The intake will be located at or near the existing water intake facility for the former Methanex site. The Project will include expansion of the intake facility, which will involve replacement of the existing intake facility. The intake point will be approximately mid-river, to ensure reliable supply of water. The concept design of the intake will be defined during FEED. The new infrastructure will include a filter with backwash facilities to limit any damage or intake of freshwater organisms. The water intake will be designed and constructed to reduce likelihood of entrainment or impingement of fish, in accordance with relevant guidelines (e.g., *Freshwater Intake End-of-Pipe Fish Screen Guideline* [DFO 1995] and *Hydrostatic Test Water Management Guidelines* [CAPP 1996]) and regulator input. The federal *Fisheries Act* requires use of fish guards on intakes to prevent undue passage of fish (DFO 1995).

A new pump house will be installed and will be connected to the LNG processing and storage site by two buried pipes. These new water pipes will follow the line of the existing water supply system to the site. The water will be treated onsite to provide potable water to the temporary workforce accommodation centre(s) and other onsite buildings. Treatment will include mechanical filtration, remineralization, chlorination, and UV-sterilization.

2.2.5.8 Temporary Infrastructure and Facilities

The Project is expected to require temporary laydown areas and facilities during construction and may include (Figure 2.2-3):

- concrete batch plant
- overland conveyor
- temporary buildings to house administration offices, subcontractor offices, temporary medical facilities, sanitary facilities, and shipping and receiving warehouse
- temporary construction roads
- workforce accommodation centre(s)
- laydown areas to stage or store construction materials
- EOF, and
- temporary utilities to support construction, including water, power, gas and sewage.

Temporary infrastructure may be required during construction, including roads, site drainage systems, and fencing.

Temporary accommodation in the form of a workforce accommodation centre or centres will be required to house construction staff. The area required for the workforce accommodation centre(s) is estimated to be approximately 50 ha to 100 ha and may be split into multiple smaller sites depending on the final configuration, availability of existing facilities, and discussions with the District of Kitimat and landowners. The centre(s) will have bedrooms, eating areas, recreational facilities, offices, and sewage treatment to support between 4,500 and 7,500 workers. Potable water for the centre(s) will be provided from the Project water treatment facility located at or near the workforce accommodation centre(s) (with water sourced from Kitimat River), but may initially be provided by the existing treated water supply of Kitimat Terminal. Solid waste will be handled as outlined above in Section 2.2.5.5. For the supply of electrical power, it is assumed that the workforce accommodation centre(s) will be connected to the grid at the existing (and expanded) Kitimat Terminal substation. Diesel generators may be utilized as temporary power supply prior to tie-in to the substation. Stormwater will be retained onsite and allowed to settle before discharge. Wastewater will be treated at a wastewater treatment plant (expected to be temporarily treated by the existing Kitimat Terminal wastewater system) and discharged.

Crew transportation will be provided to bring construction workers to Kitimat. The use of personal vehicles will be controlled to limit additional traffic on local roads and regional highways, and to reduce the need for additional parking.

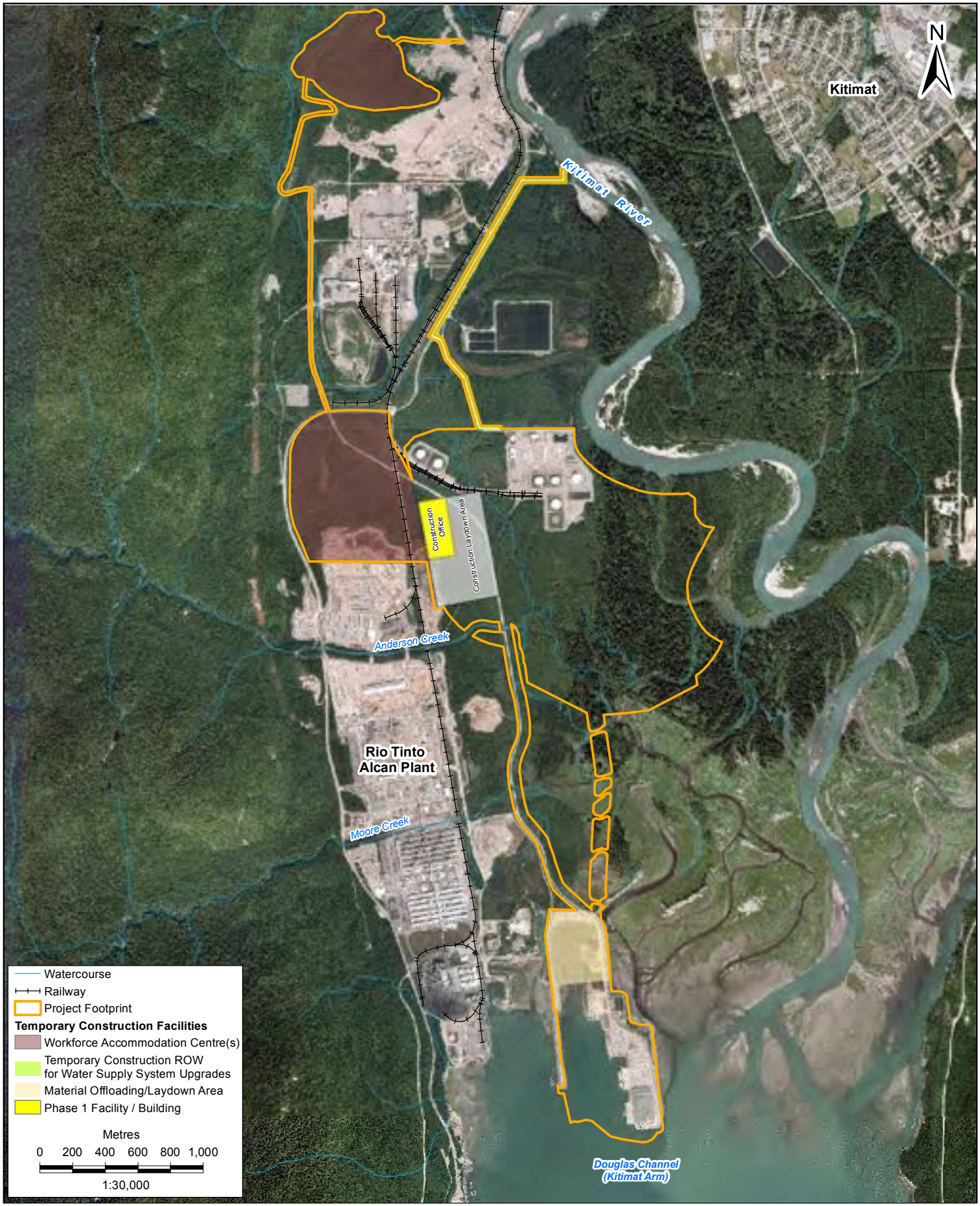

Stantec

LNG CANADA
Opportunity for British Columbia. Energy for the world

ENVIRONMENTAL EFFECTS ASSESSMENT
PROPOSED PROJECT OVERVIEW

TEMPORARY CONSTRUCTION FACILITIES LAYOUT

LNG CANADA EXPORT TERMINAL
KITIMAT, BRITISH COLUMBIA

PROJECTION: UTM9	DRAWN BY: SHS
DATUM: NAD 83	CHECKED BY: SW
DATE: 22-AUG-14	FIGURE NO.: **2.2-3**

8/22/2014 - 10:16:16 AM V:\1231\active\EM\123110458\gis\figures\EA\section_2_proposed_project_overview\fig_10458_ea_overview_2.2-3_temporary_construction_facilities_layout.mxd

Two potential sites are being considered for the workforce accommodation centre(s) and both are considered in the assessment. LNG Canada has identified two areas of potential lands: one located on RTA lands immediately adjacent to the LNG processing and storage site (approximately 64 ha), and the second located at the existing Sandhill Materials site approximately 2.5 km north of the first site (approximately 33 ha). The second site will require upgrade and expansion of an existing access road plus construction of new access road.

The EOF is expected to be built at the southern end of the Methanex jetty to load and unload major equipment and materials during construction, prior to completion of the MOF. The EOF will be designed and constructed as a temporary structure, and will be removed following the construction phase.

2.2.5.9 Marine Terminal

As shown in Figure 2.2-4, the marine facilities associated with the marine terminal include:

- two LNG carrier berths
- a MOF for multipurpose and multiuse heavy-lift loading and unloading
- a construction berth at the north end of the basin, perpendicular to the MOF, and
- EOF.

2.2.5.9.1 LNG Carrier Berths

LNG Canada has investigated several marine terminal options and undertaken vessel movement simulations to determine that the Kitimat harbour area can accommodate the LNG carriers and supporting traffic without disrupting existing shipping traffic. A computer-based movement simulation has confirmed that a redeveloped harbour area could accommodate the additional LNG carrier traffic. During operation, between 170 and 350 LNG carrier visits would occur at the marine terminal annually. Additional supporting traffic during construction would be expected to include tug boats, barges plus other support vessels (e.g., dredge barges, material barges, heavy lift vessels). It is expected that Kitimat harbour may have a number of vessels staged in several locations either undertaking work (e.g., dredging) or waiting to berth and unload. During operation, Kitimat harbour traffic is expected to primarily be escort and berthing tugs supporting the arrival and departure of LNG carriers.

There are three existing wharf facilities in Kitimat harbour currently in use by RTA and others. The marine terminal involves modifying and enhancing the existing RTA Wharf “B” to accommodate two LNG carriers, and portions of the existing Methanex jetty to accommodate temporary and permanent material offloading areas.

The marine terminal associated with full-build out of the Project includes two LNG carrier berths designed for the safe approach, berthing, loading, and departure of LNG carriers of up to 345 m long.

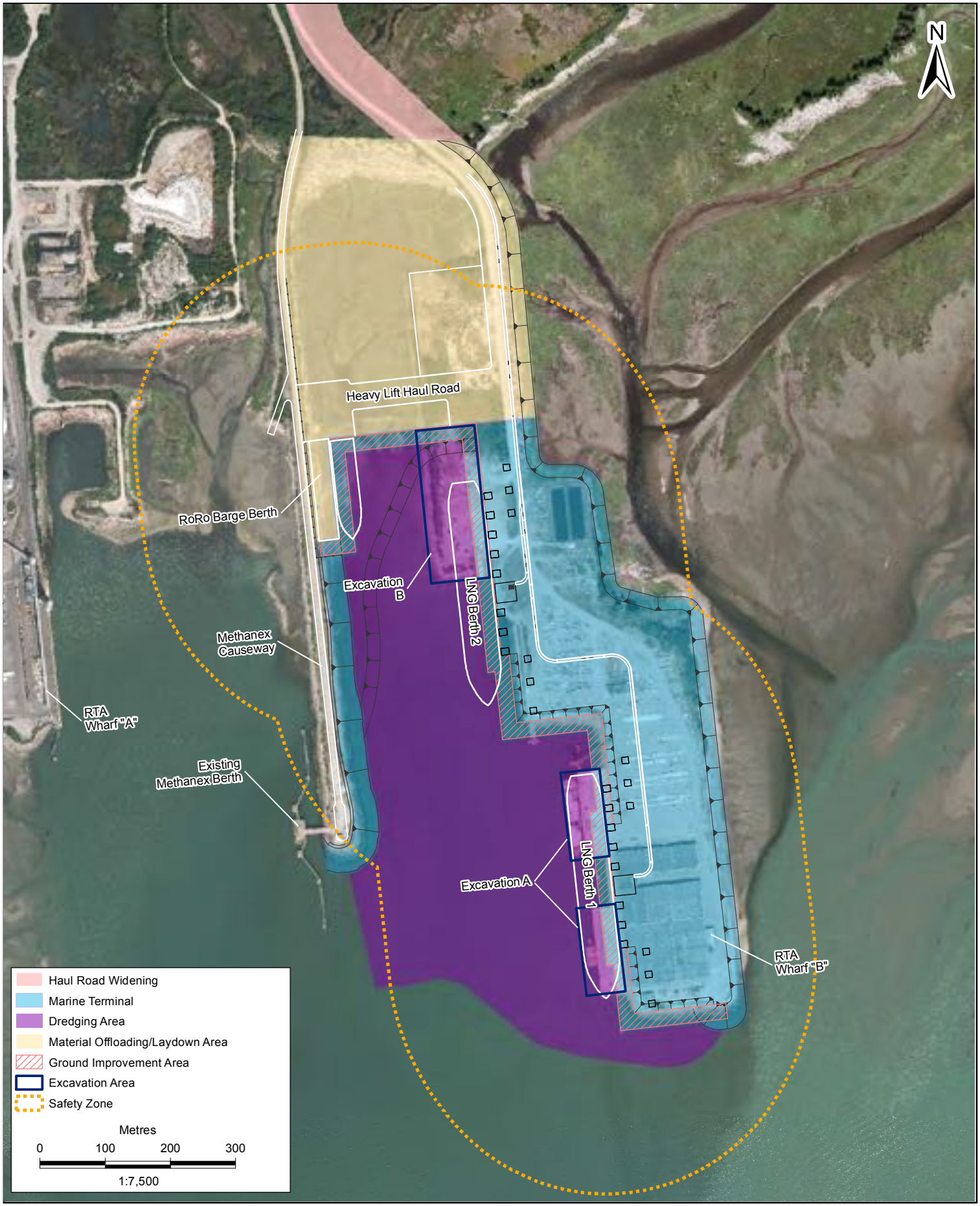

Stantec

LNG CANADA
Opportunity for British Columbia. Energy for the world

ENVIRONMENTAL EFFECTS ASSESSMENT
PROPOSED PROJECT OVERVIEW

MARINE TERMINAL LAYOUT

LNG CANADA EXPORT TERMINAL
KITIMAT, BRITISH COLUMBIA

PROJECTION	DRAWN BY
UTM9	SS
DATUM	CHECKED BY
NAD 83	SW
DATE	FIGURE NO.
22-AUG-14	**2.2-4**

V:\1231\active\EM\123110458\gis\figures\EA\section_2_proposed_project_overview\fig_10458_ea_overview_2.2-4_marine_terminal_layout.mxd
8/22/2014 - 10:16:00 AM

Dredging will be required at the LNG vessel basin for both berths, as well as for the entrance to the material offloading facility for heavy lift ships. An area of approximately 248,600 m^2, with a volume between 2.5 and 3.5 million m^3, will be dredged. Areas of the RTA Wharf "B" will be excavated prior to dredging to accommodate the LNG carrier berths.

Hydrodynamic modelling of waves and currents has confirmed that there is no need for a breakwater or other sheltering. Above and below water slopes will be designed for long-term stability and will account for waves, tides, river discharge, vessel actions, frost, erosion, rundown water, sea level rise, earthquake, and tsunami. Rock armour will be designed to withstand the 100-year return period storm conditions. Stone rip-rap size in exposed high slope (45 to 90 degrees) areas will be chosen based on 100-year wave conditions occurring at higher high water level and will be determined during FEED. Rip-rap size may be less in areas parallel to the quay walls.

Navigational aids, in compliance with federal regulations and in line with the International Association of Marine Aids to Navigation and Lighthouse Authorities, will be installed for berth approach and at the berth. Requirements will be confirmed during FEED, with input from the Pacific Pilotage Authority, Canadian Coast Guard, and Transport Canada.

2.2.5.9.2 Materials Offloading Facility

The MOF is located at the shore-end between the RTA Wharf "B" and the Methanex jetty, and is connected to the main site by the existing heavy haul road, which will be upgraded. Dredging and ground improvement at the MOF will be required during construction. Most major equipment, materials, and the natural gas liquefaction train modules will be transported to the site by vessel and offloaded at the MOF. The MOF includes the following components:

- heavy haul road
- module berth (combined berth for module, roll-on/roll-off [RoRo], and heavy-lift [LoLo] berth)
- RoRo berth (combined berth for light-weight RoRo and LoLo)
- construction berth, and
- quay walls to support the above berths, including mooring and berthing facilities, and laydown areas to facilitate direct placement of modules and equipment. The facility outfall drainage system will be integrated in the MOF.

The MOF will be capable of offloading the heaviest and largest modules, the heaviest of which is estimated to be approximately 5,200 tonnes, and be able to accommodate heavy lift ships and RoRo barges (vessels with bow or stern-ramps). The RoRo berth will allow offloading of rolling equipment from RoRo barges and some heavy-lift ships. The existing haul road will be widened to accommodate module transportation.

The MOF will be connected to the LNG processing and storage site utilities including power, sewage, water, and telecommunications.

2.2.5.9.3 Tug Use

Four harbour tugboats will be available for berthing operations at the marine terminal. While LNG carriers are berthed at the terminal, the tugs will be on station on stand-by available to assist the LNG carrier at all times. For the purposes of the assessment, it is assumed that these tugs will be fuelled by diesel.

It is being evaluated whether tug services will be contracted specifically for the Project.

2.2.5.10 Shipping

The marine access route is from the BC Coast Pilots boarding location near the Triple Island Pilotage Station through Principe Sound and Douglas Channel to Kitimat Arm, as shown on Figure 1.0-2. During operations, the Project will receive between 170 and 350 LNG carrier visits per year, depending on carrier size.

The marine access route was chosen based on its safety, cover from extreme weather, accessibility to markets, length, and versatility with respect to the nature of the Project. The route is an established commercial shipping route and is a recognized safe corridor. Initial navigational models showed safe navigational arrival and berthing operations for both LNG Canada operations and other port users (e.g., RTA). Additional simulations will be performed to confirm the safe transit of LNG carriers from the open ocean, through Principe and Douglas Channels, to the marine terminal, and vice versa, under all governing weather and sea state conditions for LNG carriers in laden and ballasted conditions.

LNG Canada has engaged with Transport Canada to coordinate the Technical Review Process of Marine Terminal Systems in Transshipment Sites (TERMPOL) for the marine shipping and marine terminal operations associated with the Project. The TERMPOL review process is expected to identify any new measures (over and above existing requirements) to improve marine navigation safety.

2.2.6 Project Activities

The construction, operation, and decommissioning activities are considered in the effects assessment. See Section 2.2.5 for additional technical details on Project components. Construction is expected to begin in 2016, operation in 2021, and decommissioning in 2046 or later. Expected duration of Project activities are outlined in Table 2.2-5.

Table 2.2-5: Preliminary Project Schedule

Project Activity	Approximate Duration
Site preparation (land-based)	1-2 years
Onshore construction	4 years
Dredging, including disposal	3 years
Marine construction	3 years
Commissioning and start-up (natural gas liquefaction trains 1 and 2)	1 year
Operation (Phase 1)	Minimum 25 years
Construction and commissioning of natural gas liquefaction trains 3, 4	Market driven
Decommissioning	2 years

2.2.6.1 Construction

Construction will begin upon receipt of the necessary regulatory approvals and permits and following the final investment decision. Construction and commissioning of the first phase of the Project is to be completed approximately five to six years following the issuance of permits. The construction activities include:

- site preparation (land-based)
- onshore construction
- dredging, including disposal
- marine construction
- waste management
- vehicle and rail traffic, and
- commissioning and start-up (including processing units, common utilities, loading and shipping facilities).

Construction also includes shipping construction materials by barge and other vessels.

2.2.6.1.1 Site Preparation

Site preparation will include vegetation clearing and grubbing, rock or material removal or fill, grading and levelling, compaction, installation of the bund around the site, and potentially some paving in designated areas. Site preparation will also be required at staging areas and, where necessary, locations of workforce accommodation centre(s). The LNG processing and storage site will be divided into areas with different finished levels (i.e., terracing) to reduce the volume of fill required. Site drainage and erosion control measures will be incorporated into site preparation, where required.

Prior to site-preparation activities, the Project development area will be surveyed and flagged. Avoidance areas (e.g., riparian areas) will be fenced or flagged according to applicable approved mitigation measures. The protected environmental setbacks adjacent to watercourses are shown on Figure 2.2-1. Activities related to the relocation and diversion of Beaver Creek will be undertaken early during site preparation.

2.2.6.1.2 Onshore Construction

Onshore construction includes the installation of infrastructure and facilities for the LNG processing and storage site, LNG loading and circulation system, utilities, water supply system, other support facilities, and access roads, and includes pressure testing.

Initial onshore construction activities will include the set-up of temporary facilities, such as trailers, maintenance buildings, approved sanitary facilities, workforce accommodation centre(s), and potentially temporary water collection structures.

Building the LNG facility will include onshore construction of:

- suitable building foundations, including installation of piles where required
- natural gas treatment facilities, and condensate stabilization and storage facilities (including construction of a rail car staging area and loading facilities in coordination with CN Rail)
- natural gas liquefaction facilities (including natural gas liquefaction trains, refrigeration compressors, and relevant infrastructure)
- two 225,000 m^3 LNG storage tanks (at full build-out)
- facility piping, process cooling towers, and facility site flare system
- a water intake structure on Kitimat River and a water supply system connecting to the facility site
- effluent treatment system for waste and storm water
- LNG loading and circulation system
- a treated wastewater discharge line from the facility to an outlet in Kitimat Arm
- ancillary support facilities, such as facility administrative offices, and storage and maintenance facilities, and
- additional temporary or permanent access roads into the facility site, the marine terminal, and potential workforce accommodation lands.

Facility structures will be built as a combination of constructed in-place (e.g., storage tanks) and modular prefabricated units. Foundation requirements for facility buildings are subject to geotechnical investigations, but are expected to be reinforced concrete slab-on-grade. Because of the volume of

concrete required for the building foundations and LNG storage tanks, there will be an onsite concrete batch plant.

Necessary utilities for both the LNG processing and storage site and marine terminal will be installed and include electrical power, industrial and potable water systems, industrial and wastewater collection and treatment, fire protection system, stormwater collection, vehicle fuelling station, and oil-water separator. All drainage and water piping systems will be set deep enough to be below the frost line to reduce the risk of freezing and rupturing in winter, or alternatively heated to prevent frost.

This stage in the construction phase will also include modifications and upgrades to the existing haul road to accommodate the transfer of large modules and equipment from the marine terminal to staging and laydown areas. Onshore construction will also include pressure testing of storage tanks and piping.

2.2.6.1.3 Dredging

Between 2.5 and 3.5 million m^3 of material over an area of approximately 248,600 m^2 is projected to be dredged for the marine terminal. Dredging is anticipated to be conducted using backhoe and cutter suction dredgers; however, final selection of equipment will consider means of optimizing sediment containment. Barge support will be required. The dredging work is currently expected to be completed within two seasons. Dredging will be carried out based on a 24 hours per day schedule, 7 days per week. The method of disposal for dredged material has not been finalized and may influence the proposed dredging methods and expected schedule. See Section 2.3.4 for an evaluation of disposal options being considered.

Dredging is scheduled early during the construction period in order to allow construction of the MOF and accommodate delivery of modules and other large construction materials.

2.2.6.1.4 Marine Construction

The construction of the marine terminal will involve modifications to the existing RTA Wharf “B” and Methanex jetty and will include:

- modifying the existing wharf areas to accommodate two LNG carriers and an adjacent material offloading area, including:
  - removal of portions of the existing wharf to accommodate two berths, and
  - installation of sheet piling, additional pilings, and relevant support structures to accommodate the LNG carriers.
- installing a temporary EOF on the south end of the Methanex jetty
- installing the MOF and laydown areas
- installing transfer piping and electrical infrastructure

- soil improvement works (stone columns)
- scour protection, and
- dredging of the harbour berth areas and transportation of dredged materials to approved containment or disposal areas.

The existing wharf will be expanded to include pile-supported trestle and berthing structures. Piles will be driven through the sediment to required resistance. Pile installation methods will be dependent on the results of geotechnical investigations.

2.2.6.1.5 Waste Management

Solid wastes from construction will be removed from the site and recycled or disposed of at approved disposal sites in compliance with applicable regulatory requirements. Waste will be separated and stored in appropriate containers for transport and disposal at existing approved waste management facilities. Each waste type to be transferred from the Project site will be manifested. The manifest establishes the necessary action to control the transfer of waste from the Project site.

Sewage effluent will be treated onsite using a wastewater treatment system capable of handling the workforce accommodation centre and on-site buildings. Hazardous wastes generated during construction will be disposed of offsite at an approved disposal facility in compliance with applicable regulatory requirements.

Additional detail on waste management is provided in Section 2.2.5.5.

2.2.6.1.6 Vehicle and Rail Traffic

During construction, workers will be transported between the Northwest Regional Airport (during crew changes) and the workforce accommodation centre(s) and the LNG facility by buses or other suitable crew transportation methods. Due to the proposed location(s) of the potential workforce accommodation centre(s), buses transporting workers between the workforce accommodation centre(s) and LNG facility are not anticipated to travel through municipalities. The estimated range of potential vehicle movements during construction is provided in Table 2.2-6**.** These estimates will be refined during FEED.

Table 2.2-6: Estimated Range of Potential Vehicle Movements during Construction

Vehicle Type	Vehicle Trips per Day (one-way)
Bus (between Northwest Regional Airport and workforce accommodation centre(s))	10 to 60 per day
Bus (between workforce accommodation centre(s) and facility site)	200 to 700 per day
Small vehicles (pick-up truck, SUV, car, van)	200 to 1,000 per day
Truck movements	40 to 200 per day

Modifications and upgrades to the existing haul road will be required for accommodating the transfer of large LNG modules and equipment from the MOF to staging areas or the LNG facility site.

Condensate will be transported from Kitimat to market by rail. A rail loading yard will be constructed at the LNG processing and storage site and could include:

- parallel loading tracks to allow for simultaneous loading of adjacent trains
- receiving tracks for receiving empty railcars
- shipping tracks with filled railcars, awaiting pickup
- storage tracks for spare railcars during periods of underproduction, and
- a repair track for repair of railcars done in-house or serviced by a third party.

2.2.6.1.7 Shipping in Materials

Some construction supplies and equipment are expected to arrive at the EOF and later the MOF. Facility components and LNG processing modules will arrive by barge or other large vessel to the MOF at the marine terminal. Construction materials, supplies, and equipment may also be delivered to the site by transport truck or rail.

2.2.6.1.8 Commissioning and Start-up

Commissioning and start-up involves bringing the LNG processing units into operation one at a time until full and stable operation is established. Once operational, the output of the LNG facility will be gradually brought up to full capacity to operate safely as per design. The facility will follow a structured systems commissioning and testing approach to ensure a safe and compliant start-up. During commissioning, components and systems will be tested for safe and reliable operation (i.e., instrumentation and safeguarding systems, testing of emergency shutdown procedures, and testing of the facility flare system).

Commissioning will also include cooling down of the LNG process units, storage tanks and LNG loading and circulation system. It is expected that a shipment of propane will be brought to site to initially cool the tanks, vessels and pipe work. The cooling process will be carefully integrated with facility start up to ensure key infrastructure is not subject to thermal stresses and shocks from sudden exposure to cryogenic temperatures

During commissioning and start-up, there may be a number of weeks of almost continuous flaring while systems are tested. The facility is being designed to accommodate commissioning procedures that enable this period to be minimized.

2.2.6.2 Operation

At full build-out, the Project will be capable of producing approximately 26 mtpa of LNG. The Project is designed for continuous year-round operation. Operation activities include:

- natural gas treatment and natural gas liquids extraction
- LNG production
- LNG loading
- waste management, and
- LNG shipping.

The operation phase is estimated to be a minimum of 25 years from start-up.

The facility will be staffed 24 hours per day, year round, covered by a shift roster (to be finalized during FEED). All site facilities will be operated from operator consoles in a single, permanently staffed centralized control room. Field auxiliary rooms will be distributed around the site for safety and to provide alternate access to controls. An emergency control centre will be located away from the processing units and will be used for coordination of major incidents.

The Project will incorporate hardware and software systems that support a high level of proactive maintenance through the Instrument Asset Management System and Analyzer Maintenance and Data Acquisition System. LNG Canada will have onsite personnel made up of staff and contractors capable of conducting routine maintenance. Specialized contractors may be required for major maintenance activities that would occur during planned maintenance outages (turnarounds). Maintenance turnarounds for each natural gas liquefaction train are anticipated to occur once every three years.

2.2.6.2.1 LNG Production

LNG production includes natural gas treatment, condensate extraction, storage, and transfer onto rail cars, as well as LNG storage and loading.

Approximately 26 mtpa of LNG will be produced using four natural gas liquefaction trains at full build-out. Two LNG storage tanks will store up to 450,000 m^3 of LNG. LNG liquefaction will take place using the Shell DMR process, which cools the gas stream in heat exchangers where it is converted into LNG. Gas-powered direct drive aeroderivative turbines will provide the mechanical power to produce the LNG. Turbines will operate continually to drive mechanical systems for the production process. Heat will be recovered from the turbine exhaust gases by a hot oil system and used as a heat source in other parts of the process.

Condensate removed from the feed gas will be stored onsite in two fixed-roof tanks with floating internal roofs. Condensate will be loaded onto rail cars using an on-site loading facility, which includes a collection system for displaced vapours that will be sent to the vapour recovery unit.

LNG will be transferred from the storage tanks to the marine terminal through the LNG loading and circulation system. It will be loaded into the carrier by marine loading arms at a rate of 12,000 m^3/h. There will be two dedicated liquid arms, one hybrid arm (for both liquid and vapour service) and one vapour return arm, for a total of four arms per berth.

2.2.6.2.2 Waste Management

Wastes generated during operation include facility emissions and solid wastes, stormwater, hazardous wastes, and shipping wastes. Additional details on waste management will be provided in the Waste Management Plan, which will identify and classify waste streams and will include protocols for handling, storage, transportation and disposal of wastes in accordance with the BC *Environmental Management Act* (EMA) and the federal *Transportation of Dangerous Good Act* and *Canadian Environmental Protection Act, 1999*. Measures to reduce waste, such as re-use and recycling, will also be included in the plan, where possible. Wastes will be temporarily stored on site in bear-proof containers prior to being shipped to an approved waste disposal or recycling facility. Each waste type to be transferred from the Project site will be manifested.

Operation of the facility will result in air emissions. Sources of air emissions such as NO_X, CO, sulphur dioxide (SO_2), particulate matter, volatile organic compounds, and hazardous air pollutants (HAPs), include:

- gas turbines (two per natural gas liquefaction train)
- thermal oxidizers
- flares (non-routine use only)
- diesel-powered back-up generators / compressors (for critical components in case of an emergency, such as black outs)
- fire pump drivers, and
- LNG carriers and tugs.

In addition to these air emissions, there will also be fugitive emissions from heavy equipment and vehicles onsite and periodic emissions related to routine maintenance and readiness testing of backup systems and emergency equipment such as emergency diesel generators.

Solid wastes will be removed from the site and transported to appropriate disposal sites. Materials will be recycled wherever possible and practical.

All liquid waste or effluent will be treated onsite to meet discharge regulations and discharged through an outfall at the marine terminal.

All hazardous wastes will be managed separately from other solid and liquid wastes. They will be stored onsite in approved containers and disposed of at a licensed facility by licensed contractors. Transportation of hazardous wastes will be done in compliance with the *Transportation of Dangerous Goods Act* and Regulations.

Shipping waste associated with LNG carriers and tugs includes air emissions, and bilge water discharge. Canada is a signatory to the *International Convention for the Prevention of Pollution from Ships* (MARPOL), including the North American Emissions Control Area regulations. Emissions from LNG carriers associated with the Project will be required to comply with the MARPOL regulations relating to SO_X and NO_X emissions (Annex VI Prevention of Air Pollution from Ships).

The *Ballast Water Control and Management Regulations* require that all vessels exchange their ballast water at deep sea before entering Canadian coastal waters or treat their ballast water before being able to discharge any ballast in waters under Canadian jurisdiction. This is in accordance with International Maritime Organization guidelines (TC 2012), which helps prevent the introduction of invasive marine species. Under the *Vessel Pollution and Dangerous Chemicals Regulations*, vessels must not discharge sewage or sewage sludge; and, the release of greywater must not result in deposition of solids in the water or leave a sheen.

2.2.6.2.3 LNG Shipping

During operation, approximately 170 to 350 LNG carrier visits (comprised of approximately 30 LNG carriers) to the marine terminal will occur annually. The marine terminal will be able to accommodate the largest LNG vessels currently operating (up to 345 m in length and 55 m wide with a capacity of up to 266,000 m^3 of LNG).

LNG carriers will use a pre-established shipping route into Kitimat Arm in coordination with the Pacific Pilotage Authority and under BC Coast Pilots advice to the ship's master. Vessels will approach from the open water north of Haida Gwaii. Pilotage into the area past Dixon Entrance is compulsory for all foreign flagged commercial vessels over 350 gross tonnes. The current pilot boarding location is at or near Triple Island, at the eastern end of Dixon Entrance, and it is expected the pilots will board the LNG carriers, and other vessels requiring pilots, at some location offshore from Triple Island. All LNG carriers will be accompanied by an escort tug through Principe Channel, Douglas Channel, and into Kitimat Arm. Up to four harbour tug boats can be used for berthing operations in Kitimat as required.

2.2.6.3 Decommissioning

Decommissioning will be required at the end of the facility's life and is anticipated to take approximately two years. Decommissioning will be completed in accordance with the laws, regulations, and standards in effect at the time; therefore, decommissioning and abandonment requirements are addressed in the Application at a preliminary level. There are currently no regulations for decommissioning of LNG facilities in BC; however, LNG Canada anticipates requirements will be established through discussions with OGC as part of facility permitting. At the end of the Project's life, a Decommissioning Environmental Management Program (DEMP) will be developed in consultation with the District of Kitimat and relevant regulatory agencies and potentially affected Aboriginal Groups.

Decommissioning activities may include:

- dismantling of land-based and marine infrastructure
- remediation and reclamation of the site
- waste management, and
- post-closure monitoring and follow-up.

The LNG processing and storage site, LNG loading and circulation system, storage tanks, and associated infrastructure will be decommissioned in accordance with the DEMP. Prior to removal, equipment will be depressurized, purged, and flushed to prevent uncontrolled releases of any potential contaminants, such as hydrocarbons.

A Phase II Environmental Site Assessment will be completed prior to reclamation. Contamination will be remediated in accordance with applicable regulations at the time of decommissioning.

Loading and unloading infrastructure at the marine terminal and material offloading facility will be decommissioned in a manner similar to the LNG processing and storage site. The marine terminal and MOF may remain in place, subject to discussion with the District of Kitimat and adjacent industrial neighbours at the time of decommissioning.

2.2.7 Design Mitigation

This section provides an overview of key environmental mitigation measures that have been incorporated into Project planning, and benefits resulting from any design changes, including:

- site selection
- engineering design features, and
- changes based on feedback obtained from government agencies, Aboriginal Groups, stakeholders, and the general public.

2.2.7.1 Site Selection

A site selection exercise was conducted during the early stages of Project planning to identify the development risks and relative suitability of potential sites. Criteria used in evaluating potential sites included: fisheries resources, adjacent water bodies (rivers, lakes, wetlands, estuaries), marine habitat, vegetation communities, species at risk, parks and other protected areas, archaeological potential and resources, air quality, water quality (freshwater and marine), waste management options, existing land use, and environmentally important areas.

The site at Kitimat was ranked as one of the most suitable sites for a variety of reasons such as existing road, rail, and power infrastructure, industrial land use zoning and a moderate level of existing disturbance, and low population density. There are no provincial parks or protected areas within 10 km of the site and the deep harbour is ice-free all year.

The four natural gas liquefaction trains have been located to maintain a buffer of 500 m from land occupied by a third party, which follows good design practices. Land buffers are constrained at the northern property boundary, the far bank of the river to the northeast, the railway to the west, and RTA facilities to the west and southwest. Natural gas liquefaction trains 3 and 4 have been staggered relative to trains 1 and 2 to avoid these constraints, while reducing the land required for the Project (Figure 2.2-1).

The footprint of the site and area of ground clearance within the site perimeter fence has been arranged to reduce the Project interaction with local watercourses. To the southwest corner, vegetated zones 30 m wide on either side of Anderson Creek have been maintained to protect riparian habitat. A 50 to 100 m vegetated buffer is maintained from the mainstem of Kitimat River and the eastern boundary of the site; portions of this riparian area have been identified as a special environmentally sensitive area on the Kitimat Zoning Map (District of Kitimat 2013c).

The LNG berths are located on the RTA Wharf “B”. This makes use of an existing facility although the wharf will need to be modified. The two berths are located to accommodate the following safety zones: a 200 m ignition free radius from the loading point and 300 m to the public. These zones will be confirmed during FEED design review.

2.2.7.2 Engineering Design Features

The Project will be developed with industry best practices, in full compliance with applicable legislation and industry standards and guidelines, including:

- Canadian and BC legislation and regulations, including CSA Standard Z276-11 (or latest revision) on LNG production storage and handling and the LNG Facility Regulation under the *Oil and Gas Activities Act* (OGAA)

- LNG Canada's policies, standards, and guidelines, including adherence to, among others:
  - Golden Rules and Life Saving Rules, and
  - Manuals of the LNG Canada HSSE&SP corporate framework.
- applicable international conventions, treaties, and agreements to which Canada is a party, and
- internationally accepted norms and standards for design, construction, commissioning, start-up and operations.

The Project will also include use of leading edge, energy efficient technologies, including aeroderivative gas turbines with waste heat recovery.

2.2.7.3 Changes Based on Feedback

Feedback obtained during consultation with government agencies, Aboriginal Groups, stakeholders and the general public provided alternatives to certain Project features and pre-construction activities, such as alternative marine access routes and the geotechnical drilling program. In certain cases, it was determined through technical and economic analysis that the suggested alternatives were not feasible and changes to the Project were not made. Suggested alternatives are further discussed in Section 2.3.

2.2.7.3.1 Feedback Received from Aboriginal Groups

LNG Canada consulted with Aboriginal Groups identified in the EAO's section 11 Order throughout Pre-Application stages on various issues, including features of the LNG facility, marine terminal, and associated shipping activities. See Section 13.2 for further information on Pre-Application consultation.

LNG Canada considered feedback provided by Aboriginal Groups, and, where practicable, incorporated it into changes to the Project or program design. Examples of this incorporation include:

- In response to concerns raised by Aboriginal Groups regarding environmental effects of geotechnical investigations being conducted at the facility site, LNG Canada modified the overall geotechnical program conducted in fall and winter 2013/14 to avoid sensitive areas and reduce potential effects of drilling on wildlife and fish-bearing streams located near the Project site.
- Aboriginal Groups identified issues related to the proposed marine shipping routes, and have expressed preference for an alternative "southern" route that avoids Principe Channel. LNG Canada considered this request during the evaluation of alternative means of undertaking the Project. Details outlining the rationale for final marine access route selection are provided in Section 2.3.
- Aboriginal Groups raised concerns regarding the methods and locations for disposal of marine sediment. LNG Canada is continuing to consult with relevant Aboriginal Groups regarding potential options for the disposal of dredge material resulting from the marine

terminal site. LNG Canada is in the process of evaluating potential alternatives and is considering preferences of Haisla Nation to use sites within Douglas Channel where dredge material may be used to cap historical log dumps.

- LNG Canada expanded the scope of the air quality assessment to include additional sampling locations and potential acid deposition areas to address Aboriginal Groups concerns regarding the effect of air emissions from LNG facility and shipping operations on regional air quality. LNG Canada has selected a hybrid approach to power requirements, using gas turbine compressor drivers for the liquefaction process trains, and import power from the BC Hydro grid for electricity, thereby reducing potential air emissions from the LNG facility.
- LNG Canada continues to work with Haisla Nation to collaboratively develop habitat compensation options to address the loss of wetland and fish habitat expected to occur from LNG facility siting decisions.

LNG Canada will continue to consult with Aboriginal Groups throughout all Project phases and collaboratively develop strategies and mitigation measures to respond to issues pertaining to the LNG facility, marine terminal, and associated shipping activities that cannot be addressed practically or entirely through Project design solutions. These concerns include potential visual effects resulting from the LNG facility and passing LNG carriers, shipping activities and Project safety. See Section 13.2 for information on proposed future consultation activities.

2.2.7.3.2 Feedback Received from the Public

LNG Canada considered feedback provided by the public and other stakeholders, and, where practicable, incorporated it into changes to the Project or program design. Examples of this incorporation include:

- Stakeholders identified issues related to the proposed marine shipping routes. Details outlining the rationale for final marine access route selection are provided in Section 2.3.
- Stakeholders raised concerns regarding disposal of marine sediment. LNG Canada will continue to consult with stakeholders regarding disposal of dredge material.
- Stakeholders have raised concerns regarding the effect of air emissions from LNG facility and shipping operations on regional air quality. LNG Canada has selected a hybrid approach to power requirements, using gas turbine compressor drivers for the liquefaction process trains, and import power from the BC Hydro grid for electricity, thereby reducing potential air emissions from the LNG facility.

2.2.8 Capital Costs and Employment

The estimated capital cost for the Project at full build-out is $25 billion to $40 billion (CAD, nominal dollars).

During construction, employment is anticipated to be 4,500 to 7,500 workers. During operation of the first phase, employment is estimated to include 200 to 300 LNG Canada staff and 150 to 250 contractor staff. At full build-out, the Project will employ approximately 250 to 450 LNG Canada staff and 200 to 350 contractor staff.

The cost and labour numbers provided in this EA are preliminary estimates for the full build-out (four trains) of the Project and are subject to change as more information becomes available. The Project is currently undertaking FEED (expected to be completed in 2015) and is expecting to call for bids for Phase 1 of the Project (trains 1 and 2) in 2015. At that time, LNG Canada will be able to refine cost estimates for Phase 1. The cost of later phase(s) of the Project will depend on a number of economic factors including timing and demand for labour and materials by other proposed BC and Canadian projects.

2.2.9 Environmental Management

A Project-specific environmental management program will be developed for the construction, operation, and decommissioning phases, as outlined in Section 12. The environmental management program will include a series of environmental management plans to protect the environment, personnel, and the public by preventing or reducing potential adverse effects from Project activities. The plans will be developed based on current best management practices, industry standards, and regulatory requirements, including mitigation measures presented in this Application and subsequent conditions of approval.

An environmental management team will be established to oversee the implementation of the environmental management program and carry out monitoring and reporting requirements. The environmental management team will work with construction and operation managers to provide corrections as needed, and will have the authority to stop work in the event that any Project activity poses an immediate detrimental risk to the environment and or contravenes the intent of the environmental management program, regulatory requirements, or conditions of approvals, permits, or licences.

The environmental management program will include a systematic approach for improvement of environmental management practices where necessary. This will allow the environmental management team to identify and implement new mitigation measures, or modify existing measures to better address environmental issues.

2.3 Alternative Means of Undertaking the Project

LNG Canada has evaluated a number of alternative designs and technologies as alternative means for undertaking the Project. The specific alternative means evaluated include:

- alternative marine access routes
- alternative location for the marine terminal
- power supply options
- disposal options for dredge material, and
- alternative sites for the temporary workforce accommodation centre(s).

As per the AIR issued by the EAO for the Project, the following criteria are used to evaluate these alternatives:

- technical requirements to construct and operate the facility and its related infrastructure, including consideration of the distance between LNG processing and storage site and the marine terminal, and the layout for the LNG loading and circulation system
- economic feasibility of the alternative for construction and operation of the LNG facility and the associated infrastructure
- land-use zoning based on the zoning in the Kitimat Municipal Code and future land use goals, objectives and policies reflected in the District of Kitimat's *Official Community Plan* (OCP) (District of Kitimat 2013a)
- ability to acquire land or to gain rights-of-way over private land
- industry safety standards (including marine safety), and
- environmental and heritage resources and the potential effects of the Project, including the environmental effects as identified in section 5 of CEAA 2012.

The evaluation of alternatives is presented in the following subsections. The evaluation criteria have been refined, with sub-criteria, to make them more applicable to options discussed herein.

2.3.1 Marine Access Route

LNG Canada included one marine access route in the Project Description, dated March 21, 2013 (LNG Canada 2013); this route is included in the section 11 Order defining the scope of the Project. As shown on Figure 2.2-3, the marine access route will start near the Triple Island Pilotage Station where BC Coast Pilots will board the LNG carrier or other marine vessel requiring pilotage, and continue south through Principe Sound, and angle east and northeast into Douglas Channel to the port of Kitimat. During early Project-related consultation, an alternative southern marine access route was considered. A southern route would require LNG carriers travelling from the marine terminal at the port of Kitimat to navigate southward into Caamaño Sound after leaving Douglas Channel, either through Whale Channel, Squally

Channel, or Estevan Sound, rather than travelling north through Nepean Sound and northwest through Principe Channel

2.3.1.1 Evaluation Summary

The marine access route selection was evaluated using the following applicable criteria (Table 2.3-1)**:**

- navigational safety and weather
- distance travelled by LNG carriers
- final destination for product, and
- interaction with potential critical habitat for marine mammals.

Table 2.3-1 Evaluation Summary – Marine Access Route Alternatives

Evaluation Criteria		Northern marine access route (Dixon Entrance to Principe Channel to Douglas Channel to Kitimat Arm)	Southern marine access route (Hecate Strait to Caamaño Sound to Douglas Channel to Kitimat Arm)
Technical Criteria	Feasible	Yes	Yes
	Weather / Oceanographic Conditions	More protected route	More exposed to weather conditions including higher winds and larger waves in Hecate Strait
	Narrow or Confined Channel Areas?	Yes, Squally Channel to Wright Sound	Yes, Caamaño Sound to Campania Sound to Squally Channel to Wright Sound
Economic Criteria	Proximity to Pilotage Authority	Triple Island	Triple Island or Pine Island. More than 3x as much travel from either location
	Proximity to Markets	More direct route out Dixon Strait and over the pole	Less direct route around southern end of Haida Gwaii
	Length of Route to Market	Shorter	Longer
Existing Use or Zoning Criteria	Existing Commercial Traffic	Yes, scheduled and variable along entire route	Yes, scheduled and variable along parts of route
	Existing Small Craft Traffic	Yes, entire route	Yes, entire route
Environmental and Heritage Resources Criteria	Sensitive Marine Areas Affected	Yes, Squally Channel to Wright Sound	Yes, Hecate Strait to Caamaño Sound to Campania Sound to Squally Channel to Wright Sound
Industrial or other Safety Criteria	Shipping Safety	Coast Guard MCTS	Coast Guard MCTS
Selection	Preferred	Yes	No

The preferred marine access route is more sheltered than a southern alternative because Camaaño Sound is exposed to the open waters of Hecate Strait and, therefore, subject to more severe weather events. Hecate Strait is open to large fetches, particularly from the southwest, and can receive long-period swells (Thompson 1989 in ASL 2010). Storm-force winds (gusts up to 100 knots), and waves up to 8 m, occur several times during the winter in the Strait (Environment Canada 1992 in ASL 2010). Coastal waterways, protected by islands, are generally more sheltered, with weaker winds and reduced fetch distances.

The final destination of the LNG product is the Asia-Pacific region, which is more efficiently reached by heading northward than southward, making the northern marine access route preferable to a southern alternative. In addition, LNG warms during transit and produces boil off gas. The northern route reduces overall distance and time to market, and results in less loss of product. The northern marine access route will require less time spent by LNG carriers in potential critical habitat for northern resident killer whale and humpback whale critical habitat than the southern marine access route alternative.

2.3.1.2 Preferred Alternative

LNG Canada selected the northern marine access route because it is more direct, provides for safer navigation of carriers, and reduces the amount of time carriers would spend in areas of potential critical habitat for northern resident killer whales and humpback what critical habitat. Potential interactions between Project-related shipping and marine resources are evaluated in Section 5.8. Potential interactions of Project-related shipping and other marine users are evaluated in Section 7.4. Environmental effects of potential accidents or malfunctions related to marine shipping are evaluated in Section 10.

2.3.2 Marine Terminal and LNG Loading and Circulation System

LNG Canada evaluated the feasibility of two site configurations, and presented both a proposed and an alternative configuration in the Project Description dated March 21, 2013 (LNG Canada 2013). In the preferred configuration, the LNG loading and circulation system extends south and downhill from the LNG processing and storage site to the marine terminal, which is built by modifying the existing RTA Wharf “B.”

In the alternative configuration, the LNG loading and circulation system would extend west from the north edge of the LNG processing and storage site, around the north end of the RTA facility, and then enter a proposed tunnel paralleling the west side of the RTA facility, emerging in District Lot 89 near the alternative marine terminal. The alternative marine terminal would require construction of two new wharves along with modifications to the existing Methanex jetty to accommodate materials offloading. The alternative configuration is longer than the preferred configuration, providing more opportunity for the

temperature of the LNG to increase. The enclosing of the LNG loading and circulation system in a tunnel is also hazardous and more expensive than the preferred alternative.

2.3.2.1 Evaluation Summary

The configuration of the marine terminal and LNG loading and circulation system was determined through negotiation of a commercial agreement with RTA, the landowner. The option agreement between RTA and LNG Canada for the acquisition or lease of the wharf and associated land for the preferred option was announced on February 12, 2014. The agreement was formed in consideration of RTA's long-term plans for its marine terminal requirements.

Upon final negotiations, LNG Canada was granted permission to modify the existing RTA Wharf "B"; RTA retained the potential wharf area adjacent to District Lots 88 and 89.

Both the preferred and alternative terminal locations and LNG loading and circulation system routes were considered technically feasible; but the economic feasibility depended on the commercial agreement with RTA (Table 2.3-2).

Table 2.3-2 Evaluation Summary – Marine Terminal and LNG Loading and Circulation System

Evaluation Criteria		Modification and Enhancement of theExisting RTA Wharf "B" and Connecting LNG Loading Line	Construction of Two New Wharves (along Lot 88/89 on the West Side of Kitimat Arm) and Modifications to the Existing Methanex jetty and Construction of the LNG Loading Line around the North and West Side of the RTA facility site
Technical Criteria	Feasible	Yes	Yes
	Suitable Route for LNG Loading Line	Yes, direct route south of facility	Yes, but with significant technical challenges, including construction of a tunnel
	Sufficient Available Land	Yes, existing wharf	Yes, but requires blasting to expand available land
Economic Criteria	Land Acquired	Yes	Not acquired
	Length / Cost	Shorter / Lower	Longer / Higher
Existing Use or Zoning Criteria	Suitable Land Zoning	Yes, industrial zoning	Yes, but would remove Hospital Beach
	Existing or Proposed Land Use Conflicts	None expected	Yes, LNG loading corridor conflicts with numerous other proposed ROWs
Environmental and Heritage Resources Criteria	Archaeological Resources Encountered	Yes	Yes
	Sensitive Environmental Areas Affected	Yes	Yes
Industrial or other Safety Criteria	Safety Issues with Existing Land Uses	None expected	Potentially
Selection	Preferred	Yes	No

2.3.2.2 Preferred Alternative

The preferred configuration is the LNG loading and circulation system extending south and downhill from the LNG processing and storage site to the marine terminal, which is constructed by modifying and enhancing the existing RTA Wharf "B" (former Eurocan wharf).

2.3.3 Power Supply

Power is required at the LNG processing and storage site to produce LNG and to operate supporting facilities and infrastructure. The natural gas liquefaction trains will use natural gas-powered direct drive turbines to produce LNG. Three options were considered to supply power for the facility:

- an "all electric" option using power from the BC Hydro grid
- the "hybrid" option, using a combination of natural gas-powered direct drive power for the natural gas liquefaction trains and power from the BC Hydro grid for the remainder of the power requirements, and
- the "all generated" option with installation of additional onsite gas-powered generation (i.e., no power from utility grid and full heat recovery from all exhausts).

2.3.3.1 Evaluation Summary

The power supply options were evaluated using the following criteria:

- cost and affordability (including installation and operating)
- capacity of existing infrastructure within the BC Hydro grid
- environmental concerns related to installation and operation of each power alternative including land disturbance and greenhouse gas emissions, and
- technical feasibility, including reliability of power supply.

The "all electric" option was considered because it would produce the lowest amount of GHG emissions. However, it would require extensive infrastructure upgrades and new infrastructure (e.g., new power lines and rights of way), which would result in substantial land disturbance and cost (Table 2.3-3). This would be addressed by BC Hydro as part of their transmission requirements.

LNG Canada has engaged BC Hydro in feasibility discussions and negotiations regarding availability of power. The BC Hydro grid does not currently have sufficient capacity to provide the power required to produce LNG without being upgraded. However, BC Hydro is able to provide reliable access to sufficient power to operate the supporting facility and infrastructure without the natural gas liquefaction trains (i.e., the "hybrid" option).

Table 2.3-3 Evaluation Summary – Power Supply

Evaluation Criteria		All Electrical Power Sourced from the BC Hydro Power Grid for the Entire facility	Hybrid – Electrical Power Sourced from BC Hydro Power Grid for Auxiliary Power	All Power Generated at the LNG Facility Site
Technical Criteria	Feasible Option for LNG Canada	Yes	Yes	Yes
	Power Availability	No, requires expansion of power grid and installation of new generating capacity	Yes	Not applicable
	Power Reliability Concerns	Potential challenges if system is not built with normal redundancy of supply	Potentially	No
Economic Criteria	Power Cost	Highest	Medium	Lowest
Existing Use or Zoning Criteria	Existing or Proposed Land Use Conflicts	None expected	None expected	None expected
Environmental and Heritage Resources Criteria	Environmental Constraints	Potentially (BC Hydro scope)	Air emissions expected	Higher air emissions expected
	Combined GHG footprint	Lowest	Medium	Highest
	Archaeological Resources Encountered	Potentially (BC Hydro scope)	None expected	None expected
Industrial or other Safety Criteria	Safety Issues with Existing Land Uses	None expected	None expected	Power Generation Regulation
Selection	Preferred	No	Yes	No

2.3.3.2 Preferred Alternative

LNG Canada has selected the “hybrid option” for power generation as a means of reducing onsite GHG emissions, in consideration of the amount of power available from BC Hydro on the existing grid in the Kitimat area.

2.3.4 Disposal of Marine Sediment

Dredging will be required at the marine terminal to accommodate LNG carriers. Dredged materials will be transported to approved containment or disposal areas. Three options are being considered for containment or disposal of dredged marine sediments:

- disposal at sea

- shallow water disposal at sea (e.g., log-capping), and
- on-land disposal.

Disposal of dredged material at sea is regulated by Environment Canada under Section 127 of the *Canadian Environmental Protection Act, 1999,* and requires application for a Disposal at Sea Permit. A permit is granted following a detailed application process, which includes an assessment and sets out conditions to protect the marine environment and human health. Potential sites for disposal of dredged materials at sea will be determined in discussion with regulators and Aboriginal Groups. Currently, LNG Canada is considering disposal at a number of sites in Douglas Channel.

Historical log-handling locations are being evaluated for disposal of marine dredged materials. Log-capping is the rehabilitation of marine areas that have been affected by sunken debris (sunken logs, bark) from historical coastal log-handling locations. Suitable dredged materials are deposited on top of the sunken logging debris to create functional marine habitat. Log-capping as a method of handling dredged sediments has been discussed during consultation with potentially affected Aboriginal Groups; potential sites will be evaluated in discussion with regulators, potentially affected Aboriginal Groups and other key stakeholders.

On-land containment options are being considered for dredge material that does meet disposal at sea criteria. These include disposal of dredged material in approved containment areas at or near the LNG facility site that meet provincial regulations and transport of other materials to a permitted landfill. Dredged material deposited on land in BC must comply with the EMA and its regulations, including contaminated sites and hazardous waste regulations, administered by the Ministry of Environment (MOE), for disposal of contaminated sediments, which cannot be permitted for disposal at sea. Contaminated sediments would be transported to licensed facility for disposal, in accordance with the EMA and the federal *Transportation of Dangerous Goods Act*.

2.3.4.1 Evaluation Summary

Options for disposal of dredged materials were evaluated based on the following criteria (Table 2.3-4):

- environmental feasibility of disposal
- capacity of potential disposal sites
- potential effects on the marine and terrestrial environments, and
- input from potentially affected Aboriginal Groups.

Table 2.3-4 Evaluation Summary – Disposal of Dredge Material

Evaluation Criteria		Deep Water Disposal at or Near Kitimat Arm	Shallow Water Disposal (Log Capping) at or Near Kitimat Arm	On-land Disposal of all Dredge Sediments at One or More Sites within 10 km of the Dredge Area
Technical Criteria	Feasible	Yes	Yes	Yes
	Suitable Sites Available	Yes	Yes	Unknown, technical challenges with volume
Economic Criteria	Cost	Lowest	Medium, depends on number of sites	Highest
	Follow-up Cost	Low, monitoring	Low, monitoring	High, ongoing management of disposal site
Existing Use or Zoning Criteria	Existing or Proposed Land Use Conflicts	Not applicable	Not applicable	Uncertain
Environmental and Heritage Resources Criteria	Environmental Constraints	Potential depending on site selection	Potential depending on site selection	Dewatering of dredge material
Industrial or other Safety Criteria	Safety Concerns	None expected	None expected	Potential, ongoing management of disposal site
Selection	Preferred	Yes	Maybe	No

Options for deep water disposal at or near Kitimat Arm included five candidate Detailed Site Assessment areas (DSAs), which were evaluated based on the following criteria (Table 2.3-5):

- distance from Project site
- water depth
- potential disposal equipment and methods
- substrate type
- presence of sensitive habitats or *species at risk*
- human health risk
- hazards
- economics
- potential for exclusion of future uses.

2.3.4.2 Preferred Alternative

Further investigation is required to determine the preferred alternative for disposal of dredged materials. Disposal at sea options and on-land disposal options are considered in the assessment of potential effects.

2.3.5 Workforce Accommodation Centre Location(s)

It is estimated that the Project will require approximately 50 ha to 100 ha for temporary workforce accommodation. LNG Canada has identified two potential sites: the first site is located on RTA lands immediately adjacent to the LNG processing and storage site (approximately 64 ha) and the second site is located at the existing Sandhill Materials site approximately 2.5 km north of the first site (approximately 33 ha). The workforce accommodation centre(s) will be designed for a maximum of 4,500 to 7,500 workers and will be required during the construction phase (between 5 and 10 years).

2.3.5.1 Evaluation Summary

LNG Canada has selected the workforce accommodation centre locations based on the following criteria (Table 2.3-6):

- availability and suitable land use
- suitable geotechnical conditions
- transportation infrastructure
- proximity to construction areas
- proximity to residential or populated areas, and
- potential effects on the terrestrial environment.

Both sites are technically and economically feasible for temporary use for workforce accommodation centre(s), and have been subject to industrial activity: the site adjacent to the LNG facility has been used for commercial logging and the Sandhill Materials site is permitted as a gravel pit. Both sites are outside the required safety buffers. However, the Sandhill Materials site is smaller than the site adjacent to the facility, and would require upgrading and expansion of an existing road. Both sites are more than 3 km from the closest residential areas (Kitimat).

Table 2.3-5 Evaluation Summary – Options for Deep Water Disposal at or near Kitimat Arm

	Potential DAS Site				
	DSA-1A	**DSA-1B**	**DSA-1C**	**DSA-2**	**DSA-3**
Distance from Project Site (km)	3.94	5.97	2.97	16.93	17.15
Approximate Water Depth (m)	200	200	200	300	225
Potential Disposal Equipment/ Methods	▪ Hydraulic dredger with floating pipe directly to disposal site ▪ Split-hull barge with surface release or subsurface discharge pipe	▪ Split-hull barge with surface release or subsurface discharge pipe	▪ Hydraulic dredger with floating pipe directly to disposal site ▪ Split-hull barge with surface release or subsurface discharge pipe	▪ Split-hull barge with surface release or subsurface discharge pipe	▪ Split-hull barge with surface release or subsurface discharge pipe
Substrate Type	▪ Soft mud/silt; <1% woody debris. ▪ Undulated complex terrain.	▪ Soft mud/silt; <1% woody debris ▪ Gentle downgrading slope	▪ Soft mud/silt; <1% woody debris ▪ Undulated complex terrain	▪ Soft mud/silt; <1% woody debris. ▪ Gentle downgrading slope.	▪ Mixture of soft mud/silt with a hard bottom with some cobble. ▪ Areas of bedrock in SE of ROV grid (base of steep wall extending from eastern shoreline).
Sensitive Habitats[a]	▪ No sensitive habitats were observed in DSA-1A during field studies. ▪ Sensitive habitats in the vicinity of DSA-1A include: • Salmon holding area (west shore of Kitimat Arm) – 1.5 km W • Herring spawning area (east shore of Kitimat Arm – low to minor spawn habitat index) – 2.25 km E • Salmon migration to surrounding watersheds – closest salmon bearing creek is 2.25 km NE (Walhl Creek). • Kitimat River estuary – 5.25 km N • Walhl Creek estuary – 2.25 km NE • Wathlsto Creek estuary – 2.25 km SE • Bish Creek estuary – 6 km SW	▪ No sensitive habitats were observed in DSA-1B during field studies. ▪ Sensitive habitats in the vicinity of DSA-1B include: • Salmon holding area (west shore of Kitimat Arm) – 1.5 km W • Herring spawning area (east shore of Kitimat Arm – low to minor spawn habitat index) – 2.25 km E • Salmon migration to surrounding watersheds – closest salmon bearing creek 1.5 km NE (Walhl Creek) • Kitimat River estuary – 5 km N • Walhl Creek estuary – 1.5 km NE • Wathlsto Creek estuary – 3.75 km SE • Bish Creek estuary – 7.5 km SW	▪ No sensitive habitats were observed in DSA-1C during field studies ▪ Sensitive habitats in the vicinity of DSA-1C include: • Salmon holding area (west shore of Kitimat Arm) – 1.12 km W • Herring Spawning Area (east shore of Kitimat Arm – low to minor spawn habitat index) – 1.5 km • Salmon migration to surrounding watersheds – closest salmon bearing creek 2.25 km NE (Wathlsto Creek) • Kitimat River Estuary – 6 km N • Walhl Creek Estuary – 5.25 km NE • Wathlsto Creek Estuary – 2.25 km NE • Bish Creek Estuary – 5.25 km SW	• No sensitive habitats were observed in DSA-2 during field studies. • Sensitive habitats in the vicinity of DSA-2 include: • North end of Coste Island – Herring spawn area (minor spawn habitat index) – 2.25 km W • Salmon migration to surrounding watersheds – closest salmon bearing creek 5.25 km NW (Emsley Cove) • Close proximity to Emsley Cove – identified as high-use area by Haisla Nation – 5.25 km NW. • Coste Rocks Provincial Park (south of DSA site) – breeding site for pelagic cormorants, pigeon guillemots, surf scoters. Marbled murrelets also utilize the area – 7.12 km S	▪ Two cloud sponge skeletons were collected opportunistically during sediment sampling in DSA-3. ▪ Sensitive habitats in the vicinity of DSA-3 include: • North end of Coste Island – Herring spawn (minor spawn habitat index) – 1.12 km NW • Salmon migration to surrounding watersheds – closest salmon bearing creek 3 km NE (Gobeil Bay). • Coste Rocks Provincial Park (south of DSA site) – breeding site for pelagic cormorants, pigeon guillemots, surf scoters. Marbled murrelets also utilize the area – 6.75 km SW • Eagle Bay Provincial Park (south of DSA site) – overwintering habitat for waterfowl – 6 km S • Detached cloud sponge was collected opportunistically at the base of a rock wall during sediment sampling conducted in SE corner of grid – 0.75 km SE

	Potential DAS Site				
	DSA-1A	**DSA-1B**	**DSA-1C**	**DSA-2**	**DSA-3**
Species at Risk[b]	▪ No *species at risk* were observed in DSA-1A during field studies. ▪ The following *species at risk* may occur in or near DSA-1A: • Eulachon • Bocaccio rockfish • Canary rockfish • Darkblotched rockfish • Quillback rockfish • Rougheye rockfish • Yelloweye rockfish • Longspine thornyhead • Green sturgeon • Bluntnose sixgill shark • Tope • North Pacific spiny dogfish • Northern abalone • Olympia oyster	▪ No *species at risk* were observed in DSA-1B during field studies. ▪ The following *species at risk* may occur in or near DSA-1B: • Eulachon • Bocaccio rockfish • Canary rockfish • Darkblotched rockfish • Quillback rockfish • Rougheye rockfish • Yelloweye rockfish • Longspine thornyhead • Green sturgeon • Bluntnose sixgill shark • Tope • North Pacific spiny dogfish • Northern abalone • Olympia oyster	▪ No *species at risk* were observed in DSA-1C during field studies. ▪ The following *species at risk* may occur in or near DSA-1C: • Eulachon • Bocaccio rockfish • Canary rockfish • Darkblotched rockfish • Quillback rockfish • Rougheye rockfish • Yelloweye rockfish • Longspine thornyhead • Green sturgeon • Bluntnose sixgill shark • Tope • North Pacific spiny dogfish • Northern abalone • Olympia oyster	▪ No *species at risk* were observed in DSA-2 during field studies. ▪ The following *species at risk* may occur in or near DSA-2: • Eulachon • Bocaccio rockfish • Canary rockfish • Darkblotched rockfish • Quillback rockfish • Rougheye rockfish • Yelloweye rockfish • Longspine thornyhead • Green sturgeon • Bluntnose sixgill shark • Tope • North Pacific spiny dogfish • Northern abalone • Olympia oyster	▪ Eulachon (5 individuals) and North Pacific spiny dogfish (1 individual) observed in DSA-3 ▪ The following *species at risk* may also occur in or near DSA-3: • Bocaccio rockfish • Canary rockfish • Darkblotched rockfish • Quillback rockfish • Rougheye rockfish • Yelloweye rockfish • Longspine thornyhead • Green sturgeon • Bluntnose sixgill shark • Tope • Northern abalone • Olympia oyster
Human Health Risk	▪ Disposal sediment will meet Environment Canada's sediment quality criteria for disposal at sea. ▪ Bioaccumulation of contaminants in marine species is not expected to occur.	▪ Disposal sediment will meet Environment Canada's sediment quality criteria for disposal at sea. ▪ Bioaccumulation of contaminants in marine species is not expected to occur.	▪ Disposal sediment will meet Environment Canada's sediment quality criteria for disposal at sea. ▪ Bioaccumulation of contaminants in marine species is not expected to occur.	▪ Disposal sediment will meet Environment Canada's sediment quality criteria for disposal at sea. ▪ Bioaccumulation of contaminants in marine species is not expected to occur.	▪ Disposal sediment will meet Environment Canada's sediment quality criteria for disposal at sea. ▪ Bioaccumulation of contaminants in marine species is not expected to occur.
Hazards	▪ Sedimentary instabilities not expected ▪ Risk for sediment slope failure assessed as low. ▪ Stratigraphy suitable for loading. ▪ Submarine sediment flow resulting from slope failures near the head of Kitimat Arm have resulted in flow features that are evident in the current bathymetric dataset covering BSA-1; although shear strength of these sediment units is expected to be low, placement in this basin may still be possible. ▪ Floating pipe may present navigational hazard.	▪ Sedimentary instabilities not expected. ▪ Risk for sediment slope failure assessed as low. ▪ Stratigraphy suitable for loading. ▪ Submarine sediment flow resulting from slope failures near the head of Kitimat Arm have resulted in flow features that are evident in the current bathymetric dataset covering BSA-1; although shear strength of these sediment units is expected to be low, placement in this basin may still be possible.	▪ Sedimentary instabilities not expected. ▪ Risk for sediment slope failure assessed as low. ▪ Stratigraphy suitable for loading. ▪ Submarine sediment flow resulting from slope failures near the head of Kitimat Arm have resulted in flow features that are evident in the current bathymetric dataset covering BSA-1; although shear strength of these sediment units is expected to be low, placement in this basin may still be possible. ▪ Floating pipe may present navigational hazard.	▪ Sedimentary instabilities not expected. ▪ Risk for sediment slope failure assessed as low. ▪ Stratigraphy suitable for loading.	▪ Geotechnical information not available to allow for hazard assessment.

	Potential DAS Site				
	DSA-1A	**DSA-1B**	**DSA-1C**	**DSA-2**	**DSA-3**
Economics	▪ Second closest of the five potential DSA sites to the Project site. ▪ No physical (oceanography, geophysical, geotechnical, marine sediment, weather) constraints were identified. ▪ Biological constraints included benthic invertebrates and fish, which may require mitigation. ▪ Social/cultural constraints include land and resource uses (navigation and proximity to parks), commercial, recreational, and Aboriginal fisheries.	▪ Third closest of the five potential DSA sites to the Project site. ▪ No physical (oceanography, geophysical, geotechnical, marine sediment, weather) constraints were identified. ▪ Biological constraints included benthic invertebrates and fish, which may require mitigation. ▪ Social/cultural constraints include land and resource uses (navigation and proximity to parks), commercial, recreational, and Aboriginal fisheries.	▪ Closest of the five potential DSA sites to the project site. ▪ No physical (oceanography, geophysical, geotechnical, marine sediment, weather) constraints were identified. ▪ Biological constraints included benthic invertebrates and fish, which may require mitigation. ▪ Social/cultural constraints include land and resource uses (navigation and proximity to parks), commercial, recreational, and Aboriginal fisheries.	▪ Fourth closest of the five potential DSA sites to the Project site ▪ No physical (oceanography, geophysical, geotechnical, marine sediment, weather) constraints were identified. ▪ Biological constraints included benthic invertebrates, fish, and marine mammals, which may require mitigation. ▪ Social/cultural constraints include land and resource used (navigation and proximity to parks), commercial, recreational, and Aboriginal fisheries.	▪ Farthest of the five potential DSA sites to the Project site ▪ No physical (oceanography, geophysical, geotechnical, marine sediment, weather) constraints identified. ▪ Biological constraints included benthic invertebrates, fish, marine mammals and marine birds, which may require mitigation. ▪ Social/cultural constraints include land and resource used (proximity to parks), commercial, recreational, and Aboriginal fisheries.
Exclusion of Future Uses	▪ No exclusion of future uses is anticipated.	▪ No exclusion of future uses is anticipated.	▪ No exclusion of future uses is anticipated.	▪ No exclusion of future uses is anticipated.	▪ No exclusion of future uses is anticipated.

NOTES:
a Sensitive habitats include biogenic habitats (i.e., cold-water coral/sponge reefs, eelgrass beds, kelp beds), and rare/unique habitats.
b Species at risk includes species designated as endangered, threatened, or special concern under the federal Species at Risk Act or by the Committee on the Status of Endangered Wildlife in Canada.
BSA – Basin Study Area
DAS – disposal at sea
DSA – Detailed Site Assessment area

SOURCES:
Golder Associates Ltd. 2014a. Environmental Constraints Analysis. Prepared for LNG Canada Development Inc.
Golder Associates Ltd. 2014b. Factual Report on Marine Sediment Investigation – Toxicity Assessment Program – Proposed LNGC Dredge Pocket. Prepared for LNG Canada Development Inc.
Golder Associates Ltd. 2014c. Characterization of Benthic Communities and Habitat Conditions at Potential Disposal at Sea (DAS) Sites. Technical Memorandum. Prepared for LNG Canada Development Inc.
Golder Associates Ltd. 2014d. Analysis or ROV Video Survey Data for Potential Glass Sponge Occurrences within Disposal at Sea (DAS) Candidate Sites. Technical Memorandum. Prepared for LNG Canada Development Inc.

Table 2.3-6 Evaluation Summary – Workforce Accommodation Centre Location

Evaluation Criteria		Adjacent to LNG Site	Sandhill Materials Site
Technical criteria	Feasible	Yes	Yes, but available area would limit capacity
	Land available	Yes	Yes, but limited to approximately 30 ha
	Water supply	Kitimat River	Kitimat River
	Sewage treatment	Onsite treatment, marine disposal	Onsite treatment, marine disposal
Economic criteria	Cost	Lower	Higher
	Length of worker commute	Not applicable	Slightly longer
Existing use or zoning criteria	Suitable land use zoning	Yes	Yes
Environmental or heritage resources criteria	Environmental constraints	None expected	None expected
Industrial or other safety criteria	Interaction of crew bus traffic with the Town of Kitimat	During crew changes to/from regional airport	During crew changes to/from regional airport
Selection	Preferred	Yes	Maybe

2.3.5.2 Preferred Alternative

Both potential sites for workforce accommodation centre(s) are considered in the assessment of potential effects. The location and size of the potential workforce accommodation centre(s) required to support the construction phase will be refined through Project planning.

2.4 Land and Marine Use

This section provides an overview of land and marine use relevant to the Project. Specific information relating to current use of land and resources for traditional purposes by Aboriginal Groups is provided in Part C of the Application.

2.4.1 Land Use

The Project is located on private land within the District of Kitimat, acquired through a commercial agreement with RTA (2014). The Project site is located in Zone M1 – Manufacturing, with permitted uses detailed under Part – 9, Division 6 (Industrial Zoning) of the Kitimat Municipal Code (District of Kitimat 2013b, 2013c). According to Kitimat's Official Community Plan (OCP), industrial areas are "intended for medium or heavy industrial uses and port development" (District of Kitimat 2013a).

Public consultation regarding the proposed land use was not required because the Project will be located on private land zoned for industrial development. However, consultation with adjacent communities, including Haisla Nation, was required to determine potential interactions with local residents. To facilitate consultation with local residents, LNG Canada opened a Community Information Centre in Kitimat in June 2013 (LNG Canada 2014).

A small portion of land along the east side of the LNG processing and storage site is in an area identified in the Municipal Code as G6-A – Special Area, Environmentally Sensitive. This zone permits natural open space, outdoor recreation and special uses, and "preservation or improvement of habitat for fish, marine life, birds, mammals and other creatures" (District of Kitimat 2013b). A zoning amendment may be required if development of the Project that overlaps with this zone does not comply with the permitted use identified by the District of Kitimat (District of Kitimat 2014). LNG Canada will consult with the District of Kitimat to discuss whether a zoning amendment will be required, depending on the use specific to the portion of the Project that will overlap with the G6-A zone.

The following documents provide further land use guidance for the Kitimat area:

- *Kalum Land and Resource Management Plan* (2002). This is an integrated land use plan initiated in 1992 and approved in 2002. The Plan area covers close to 2.2 million ha, and includes the Kalum Forest District and the communities of Terrace, Kitimat, and Kitamaat Village. The Plan provides broad management direction for the sustainable use of Crown land and resources (including land, forests, lakes, and rivers), and provides recommendations regarding access, recreation and economic values, and designation of Protected Areas (MFLNRO 2002).
- *District of Kitimat Official Community Plan.* This plan was developed in 2008, and amended in 2013, in accordance with the BC *Local Government Act* (s.877). It provides the objectives, goals, and policies used to guide long-term planning and land-use management decisions for the District of Kitimat until 2027.
- *Kitimat Municipal Code, Part 9 – Planning*. These are regulatory bylaws for the District are consolidated in the Kitimat Municipal Code, which outlines the policies and regulatory framework of various local government functions in 13 sections or "Parts" (District of Kitimat 2013b).
- *Haisla Nation – BC Strategic Land Use Planning Agreement (2006*). This document outlines the details regarding the strategic land use planning agreement between Haisla Nation and the Province of BC. It also outlines a set of land use management objectives, which include Haisla Nation's traditional territory (Province of BC 2006).

The Project will be an important contributor to the regional economy and can potentially influence land-use development in other areas. In addition to the Kalum Land and Resource Management Plan, land use guidance for the broader region is provided through the following documents:

- *City of Terrace Official Community Plan* (2009). This provides a statement of objectives and policies that will guide community planning and land use management decisions within the City's municipal boundaries until 2050 (City of Terrace 2011).
- *Northwest Regional Airport (NWRA) Master Plan* (2014). This provides a long-term planning framework for the future development and growth of the airport, including upgrades to the airfield, expansion of the terminal facility, improvements to ground access and parking, and commercial development (AirBiz 2014).
- *Kitselas Land Use Plan (*2012). This plan outlines the community's vision, objectives, and priorities for managing use on reserve lands for a period of five to 10 years. The intent of the Plan is to provide the community, Lands Management Office, and Chief and Council a Terms of Reference for making land-use decisions (Kitselas First Nation 2012).
- *Interim Land and Marine Resources Plan of the Allied Tsimshian Tribes of Lax Kw'alaams (*2004). This provides broad policy directives for sustainable use and development of traditional lands and resources, while protecting traditional activities from industrial development. Land use zones are designated to provide management directives for activities that are permitted and prohibited in each zone (Lax Kw'alaams 2004).

The RTA facility has existing land and marine infrastructure adjacent to the LNG Canada site and is currently undergoing a modernization program, which will involve construction and redevelopment at the current site and will not require the acquisition of new lands or rezoning. RTA also proposes a Terminal A Extension Project which is currently in the pre-Application stage of assessment under BCEAA.

There are a number of other developments proposed for Douglas Channel (e.g., Kitimat LNG, Enbridge Northern Gateway, and BC LNG); none are located adjacent to the Project site. They are proposed for other areas in Douglas Channel and are not at the head of Kitimat Arm.

2.4.2 Marine Use

The marine access route between the pilot boarding location near Triple Island and the port of Kitimat is approximately 295 km and transits through parts of Hecate Strait, Principe Channel, Wright Sound, Douglas Channel, and Kitimat Arm. Three Aboriginal communities occur along the marine access route. Kitamaat Village, a Haisla Nation community, is located on the east side of Kitimat Arm, approximately 5 km south of Kitimat. Hartley Bay, a Gitga'at First Nation community, is located near the south end of Douglas Channel, approximately 3 km west of the shipping route. Kitkatla, a Gitxaala Nation community, is located on Dolphin Island, approximately 10 km east of the marine access route.

The marine access route area is used by Aboriginal Groups for traditional harvesting and for a variety of marine-based activities (see Section 14, Aboriginal Interests). Consequently, the assessment areas for marine resources (Section 5.8) and marine transportation and use (Section 7.4) overlap with the traditional territories of First Nations identified in the section 11 Order. Marine traffic occurring along the marine access route includes commercial and recreational fishing vessels, pleasure craft, cargo vessels, ferries, cruise ships, and tug and tow, and eco-tourism vessels. Planning for the use of waterways and adjacent areas is covered under a number of initiatives:

- Pacific North Coast Integrated Management Area (PNCIMA) Initiative. This provides a framework for a sustainable and integrated management of coastal waters from Campbell River to the Alaska border (PNCIMA 2014a). The PNCIMA Plan will include strategies to balance human activities at a regional scale, such as fishing, shipping, energy development, recreation, and tourism, with sustainable use of marine resources. The planning process is currently underway, with the draft plan released for public comment in spring 2013 (PNCIMA 2014b).
- Marine Planning Partnership Initiative for the North Coast. This initiative is a collaboration of 18 First Nations and the Province of BC to develop long-term management plans for marine use, protection, and ocean health along the North Pacific Coast of BC at a more local scale. Four localized coastal and marine plans for each sub-region, Haida Gwaii, North Coast, Central Coast, and North Vancouver Island, and an overall regional priorities plan will be developed. The draft plans are scheduled to be released for a public comment period during spring 2014, with final plans completed by October 2014 (MaPP 2014).
- Coastal Land Use Decision Implementation (CLUDI). In 2013, the BC Ministry of Forests, Lands and Natural Resource Operations established an *Ecosystem Based Management Plan* through CLUDI. This resulted in new protected areas (conservancies) and the legal establishment of Biodiversity, Mining and Tourism Areas (BMTA). Three BMTAs have been designated along the marine access route on the northwest side of Porcher Island, on the northeast slope of Banks Island, and the southern end of Pitt Island.
- Draft North Coast Marine Plan (Version # 3.1) (2014). Using an ecosystem-based approach to planning and management, the plan provides direction for developing and maintaining resilient marine ecosystems and sustainable economies for the North Coast communities, informed by Aboriginal Groups and provincial strategic marine use plans and priorities (North Coast – Skeena First Nation 2014).
- Metlakatla Draft Marine Use Plan (2014). This plan uses an ecosystem-based management approach to planning and managing economic development and capacity needs for the marine market and non-market economy (Metlakatla First Nation 2014).

  Kitsumkalum Community Marine Use Plan (2014). The Kitsumkalum First Nation has developed a community marine use plan, which outlines the community's policies on decision

making, economic development, revenue sharing and the mitigation of effects from industrial development.

2.4.3 Parks and Protected Areas

Figure 2.4-1 shows protected areas near the Project. There are no land-based parks or protected areas in the immediate vicinity of the LNG facility. However, there are five Class A Provincial Parks accessible by land located in the general area between Kitimat and Terrace, three of which are accessible via Highway 37 (BC Parks 2014):

- Kitimat River Park
- Lakelse Lake Wetlands Provincial Park
- Lakelse Lake Provincial Park
- Hai Lake–Mount Herman Provincial Park, and
- Nalbeelah Creek Wetlands Park.

There are 10 marine conservancies, one marine accessible Class A provincial park, and one protected area proximate to the proposed marine access route (BCMCA 2013):

- Banks Nii Luutiksm Conservancy
- Foch–Gilttoyees Park and Protected Area
- Gitxaala Nii Luutiksm/Kitkatla Conservancy
- Jesse Falls Protected Area
- K'distsausk/Turtle Point Conservancy
- Ksgaxl/Stephens Islands Conservancy
- Ktisgaidz/MacDonald Bay Conservancy
- Lax Ka'gaas/Campania Conservancy
- Lax Kwaxl/Dundas And Melville Islands Conservancy
- Lax Kwil Dziidz/Fin Conservancy
- Maxtaktsm'aa/Union Passage Conservancy, and
- Stair Creek Conservancy.

There are numerous recreation areas and opportunities for outdoor recreation easily accessible from or near the communities of Kitimat and Terrace. There are six municipal parks, including two campgrounds and eight trails, located in the District of Kitimat and one campground and four trails located in the community of Terrace. Another four public recreation sites and seven trails are located between the communities, accessible via Highway 37 and forest service roads in the area.

Stantec

LNG CANADA
Opportunity for British Columbia. Energy for the world

ENVIRONMENTAL EFFECTS ASSESSMENT
PROPOSED PROJECT OVERVIEW

PROTECTED AREAS, PARKS AND CONSERVANCIES: KITIMAT AREA AND SHIPPING ROUTE

LNG CANADA EXPORT TERMINAL
KITIMAT, BRITISH COLUMBIA

PROJECTION	DRAWN BY
UTM9	SS
DATUM	CHECKED BY
NAD 83	SW
DATE	FIGURE NO.
18-JUN-14	**2.4-1**

6/18/2014 - 11:28:23 AM \\cd1183-f04\workgroup\1231\active\EM\123110458\gis\figures\EA\section_2_proposed_project_overview\fig_10458_ea_overview_2.4-1_protected Areas_parks_conservancies.mxd

2.5 Benefits of the Project

2.5.1 Introduction

The Project will provide a key link in allowing natural gas production from the WCSB to reach growing global markets for LNG, and it offers an opportunity for increased economic growth and greater prosperity locally in Kitimat and Terrace, throughout the province and across the country. The Project will benefit both BC and Canada through economic development and diversification, job creation, and increased government revenue. It will also support the province of BC's strategic interests in developing an LNG industry.

LNG Canada is proposing to spend between $25 billion and $40 billion on construction and between $7 billion and $17 billion per year during 25 years of operations, with decommissioning expected to cost between $2.1 billion and $3.3 billion (figures in nominal Canadian dollars [$]). The Project will directly and indirectly create between 0.7 million and 1.4 million person years (PYs) of employment in Canada during construction, operation, and decommissioning. It will generate between $17 billion and $39 billion in tax revenues for the Government of Canada, exclusive of corporate income taxes paid during the operations phase.

About 20% of total construction costs, 53% of annual operating costs and 81% of decommissioning costs will be spent in BC. This will create between 344,000 and 762,000 PYs of employment in BC during construction, operation and decommissioning and provide between $18 billion and $41 billion in revenues for the provincial government.

The cost and labour numbers provided in this EA are preliminary estimates only for the full build-out (four trains). These numbers are subject to change as more information becomes available. The Project is currently undertaking FEED and is expecting to call for bids for Phase 1 of the Project (trains 1 and 2). At that time, LNG Canada will have a much better idea of the estimated costs for Phase 1. The cost of later phases of the Project will depend on a number of economic factors including timing and demand for labour and materials by other proposed BC and Canadian projects.

Information on estimated Project costs, exclusive of corporate income taxes paid during the operations phase, and the distribution of these costs within Canada was provided directly by LNG Canada.

2.5.2 Methods

The cost estimates were reviewed and categorized on a commodity and provincial basis using detailed commodity listings provided by Statistics Canada. The costs, as categorized, were submitted to the Industry Accounts Division of Statistics Canada where custom runs of the “Statistics Canada Interprovincial Input-Output Model” (SCIPIOM) were undertaken. The SCIPIOM provides the economic

impact of the expenditures associated with the Project. Project cost information was also provided to BC Stats to undertake a custom run of the BC Input Output Model. However, as of September 4, 2014, BC Stats was unable to undertake this analysis. Results from the BC Input Output Model, if and when provided, will be considered as appropriate in estimates of direct, indirect and induced economic benefits.

The following assumptions are used to evaluate the potential economic impacts from the Project:

- All dollar figures are expressed in nominal Canadian dollars ($), unless otherwise stated, and are inclusive of a 2% annual inflation factor beginning in 2015.
- The CAD/USD conversion rate used is 1.1076:1.
- Cost estimates are provided for a full build-out scenario, which consists of four LNG trains. Costs were calculated based on estimates of constructing Phase 1 (two trains), and were scaled up to include the cost of full build-out (trains 3, 4).
- Costs are inclusive of the LNG facility, including the marine terminal and associated land-based infrastructure. The estimates do not include costs of LNG carriers, or supporting marine vessels, such as escort tugs and berthing tugs, as these will not be under LNG Canada ownership.

At the current stage of Project design, construction and operating cost estimates are considered accurate to within ±20%. To reflect this uncertainty, and particularly the uncertainty about the cost and timing of full build-out, the cost estimates and associated assessment of economic impacts are expressed in terms of low-cost and high-cost scenarios. For construction and decommissioning, the low and high cost scenarios represent different sets of cost assumptions. For operation, the cost range is expressed as follows:

- low cost estimate basis, to which the 2021 cost escalation factor has been applied (equivalent to start of operations in 2021)[1], and
- high cost estimate basis, to which the 2045 cost escalation factor has been applied (equivalent to operating cost at end of year 25).

[1] Project benefits are presented on a full build-out basis. While it is assumed here that subsequent phases (trains 3, 4) would be coincidental with Phase 1 (trains 1 and 2), the timing for construction of subsequent phases will be based on market demand.

2.5.3 Project Costs

2.5.3.1 Capital Costs

Construction is estimated to cost between $25 billion and $40 billion. While the majority of Project construction will be new, the LNG facility will be built partly on land that was previously cleared and used by Methanex for its methanol plant. As well, the marine terminal will involve the re-use and modification of the existing RTA "B" Wharf, rather than greenfield construction of a marine terminal. Table 2.5-1 provides an overview of estimated total capital costs for the Project.

Project construction will draw labour, equipment, and materials sourced from within Canada and from abroad. Preliminary estimates indicate that approximately 20% of construction will be procured from BC, 27% from elsewhere in Canada, and 54% from abroad.

Table 2.5-1: Estimated Construction Spending in BC, Canada, and Abroad

	Low Estimate ($ millions)	High Estimate($ millions)	Percent of total (%)
BC	4,885	7,870	20%
Other Canada	6,655	10,570	27%
Total Canada	11,540	18,440	46%
Foreign	13,460	21,560	54%
TOTAL	25,000	40,000	100%

NOTE:
Values may not sum to totals shown because of rounding
Source: Data provided by LNG Canada

The major types of commodities and services that will be procured from Canadian sources during construction and the distribution of costs between BC and other parts of Canada are listed in Table 2.5-2. Labour costs paid directly by LNG Canada represent the largest single cost item, accounting for 19% of total estimated expenditures in Canada. However, all of the expenditure items identified as services in Table 2.5-2 also include a large labour cost component, especially construction services, professional and engineering services, and other services, which collectively account for 31% of estimated Canadian expenditures. Expenditures on goods, including machinery, spare parts, concrete, and fuel, will comprise 28% of total estimated Canadian expenditures. Overhead costs and miscellaneous expenditures account for the remaining 22% of estimated Canadian expenditures.

Table 2.5-2: Estimated Construction Spending within Canada by Commodity and Service

Construction Costs		Canadian Content			Sourced within Canada			
					BC			Other Canada (%)
		Low Estimate ($ millions)	High Estimate ($ millions)	Percentage of total (%)	Low Estimate ($ millions)	High Estimate ($ millions)	Percentage of Canada (%)	
Direct Labour		2,265	3,525	19%	850	1,320	38%	62%
Services	Construction Services	1,100	1,760	10%	550	880	50%	50%
	Professional and Engineering Services	235	365	2%	60	90	25%	75%
	Transportation (Freight)	415	640	3%	250	385	60%	40%
	Transportation (Personnel)	350	640	3%	200	165	57%	43%
	Camps	600	955	5%	300	475	50%	50%
	Other Services	915	1,415	8%	250	385	27%	73%
Goods	Machinery	765	1,250	7%	0	0	0%	100%
	Pre-fabricated Structures	750	1,240	7%	85	140	11%	89%
	Spare Parts	335	365	2%	235	255	70%	30%
	Ready-mix Concrete	165	365	2%	165	365	100%	0%
	Fuel	165	185	1%	165	185	100%	0%
	Purchased Utilities	0	185	1%	0	185	100%	0%
	Other Goods	1,000	1,540	8%	500	770	50%	50%
Other Expenditures		1,225	1,990	11%	525	855	43%	57%
Overhead Costs		1,250	2,020	11%	750	1,210	60%	40%
Total		**11,540**	**18,440**	**100%**	**4,885**	**7,870**	**43%**	**57%**

NOTE:
Values may not sum to totals shown because of rounding
Source: Data provided by LNG Canada

Expenditures within BC during construction are estimated to be in the range of $4.9 billion to $7.9 billion (Table 2.5-2). Identified major goods and services sourced from BC providers will include direct labour ($850 million to $1,320 million), construction services ($550 million to $880 million), camps ($300 million to $475 million), transportation services ($450 million to $750 million), spare parts ($235 million to $255 million), concrete ($165 million to $365 million), and fuel ($165 million to $185 million). Other expenditures on goods and services will account for the remaining $2.1 billion to $3.6 billion of Project purchases from suppliers within BC.

An estimated $2.1 billion to $3.5 billion of expenditures during construction will be spent in northwest BC (45% of BC expenditures). It is expected that local residents could account for up to 10% of the Project labour force and that regional businesses could provide the following types of goods and services required for construction: clearing; logging and log salvage; gravel supply; construction of access roads; camp operations and catering; security; air and ground transportation; spare parts, maintenance, and office supplies; ready-mix concrete; utilities; and other construction services.

2.5.3.2 Operating Costs

The annual operating costs are estimated to range between $7.5 billion to $17.4 billion (**Table 2.5-3**). The purchase of natural gas used in the production of LNG, including transportation tariffs, will account for more than 91% of estimated annual operating costs. Annual gas purchases are estimated at $6.8 billion to $15.9 billion (undiscounted). While the gas for the Project may be sourced from throughout the WCSB, it is assumed for modelling purposes that the gas will be sourced equally from BC and Alberta.

Table 2.5-3: Estimated Annual Operations Spending within Canada by Commodity and Service

Cost Item		Total		BC		Other Canada		Foreign	
		Low Estimate ($ millions)	High Estimate ($ millions)	Low Estimate ($ millions)	High Estimate ($ millions)	Low Estimate ($ millions)	High Estimate ($ millions)	Low Estimate ($ millions)	High Estimate ($ millions)
Labour		145	345	100	240	30	70	15	35
Natural Gas		6,845	15,890	3,425	7,945	3,420	7,945	0	0
Purchased Goods and Services	Purchased utilities	170	410	175	410	0	0	0	0
	Repair and Maintenance	145	335	145	335	0	0	0	0
	Other Services	85	200	40	100	25	60	15	40
	Overhead Costs	85	200	40	100	20	50	20	50
	Sub-Total	485	1,145	400	945	45	110	35	90
Total		**7,470**	**17,375**	**3,925**	**9,130**	**3,495**	**8,125**	**50**	**125**
Percent of Total (%)		**100**		**53**		**47**		**1**	

NOTE:
Values may not sum to totals shown because of rounding
Source: Data provided by LNG Canada

Annual labour costs are estimated to be in the range of $140 million to $340 million, or 2% of annual operating costs. During the Project's operation phase, BC residents are expected to account for approximately 70% of operating labour, with 20% consisting of residents from other parts of Canada and 10% consisting of imported labour from outside Canada.

Annual spending on goods and services is estimated to range between $485 million and $1.1 billion. Of this, an estimated $400 million to $945 million will be spent in BC each year (83% of the total). LNG Canada expects to purchase all of its utilities, repair, and maintenance services from within BC, but some spending on corporate overhead costs and other services will occur elsewhere in Canada and abroad.

The value of labour, goods, and services procured from sources in northwest BC is expected to range between approximately $335 million and $790 million per year. This is 67% of operating costs (excluding natural gas).

Over 25 years of operation, total operating costs, including natural gas and employment, will range from approximately $240 billion to $345 billion. Total spending in BC over the 25-year operating period will range from approximately $125 billion to $180 billion.

2.5.3.3 Decommissioning Costs

Decommissioning costs are estimated to range between approximately $2.1 billion to $3.3 billion. As shown in Table 2.5-4, major expenditures during decommissioning include labour (29%), construction services (18%), transportation (7%), and professional and other services (14%). It is estimated that 95% of decommissioning expenditures will occur in Canada, mostly in BC (81% of total costs) and 50% of labour, goods, and services needed for decommissioning will be procured from sources in northwest BC.

Table 2.5-4: Estimated Decommissioning Spending in Canada by Commodity and Service

Decommissioning Costs		Canadian Content			Sourced within Canada			
					BC			Other Canada (%)
		Low Estimate ($ millions)	High Estimate ($ millions)	Percent of total (%)	Low Estimate ($ millions)	High Estimate ($ millions)	Percent of Canada (%)	
Direct Labour		525	870	90	350	580	67	33
Services	Construction Services	390	580	100	350	525	90	10
	Other Professional Services	195	195	100	195	195	100	0
	Transportation (Freight)	195	195	100	195	195	100	0
	Worker Accommodation	195	390	100	195	390	100	0
	Other Services	195	195	100	195	195	100	0
Goods	Fuel	195	195	100	195	195	100	0
	Other Goods	0	195	0	0	195	0	100
Overhead Costs		155	310	80	80	155	50	50
Total		**2,035**	**3,120**	**95**	**1,745**	**2,615**	**86**	**14**

NOTE:
Values may not sum to totals shown because of rounding
Source: Data provided by LNG Canada

2.5.4 Employment

As of September 2014, LNG Canada employs a full time staff of approximately 200 people, at offices in Kitimat, Vancouver, and Calgary. The number of staff positions is expected to grow during construction. LNG Canada is also employing engineers, scientists, and technicians to conduct studies associated with the EAC Application and provide other services.

2.5.4.1 Construction

2.5.4.1.1 Direct Employment

Direct construction employment will occur in Kitimat, and direct employment during construction is estimated at 36,500 person-years (PYs). Of this, an estimated 26,300 PYs of labour will be required to construct Phase 1 (trains 1 and 2) and 10,200 PYs will be required to construct subsequent phases (trains 3, 4).

Current planning is for a phased construction approach. Phase 1 includes early works, such as ground preparation, preparation of the marine offloading facility, and workforce accommodation centre; installation of trains 1 and 2; and much of the marine terminal and port works. During Phase 1, the workforce is predicted to peak at approximately 7,500 persons, with the average labour force over the 5-year construction period being approximately 3,470 persons. Subsequent phase(s) will consist of installation of trains 3, 4, and ancillary equipment. Employment during subsequent phase(s) is predicted to average 1,080 persons over a 4-year construction period, with peak employment reaching 3,700 persons.

LNG Canada estimates that 10% of the direct construction workforce will be hired locally, 20% from other parts of BC, 50% from other parts of Canada, and 20% from abroad. Thus, construction will directly provide 29,200 PYs of work for residents of Canada, including 10,950 PYs of work for residents of BC, with residents of northwest BC accounting for 3,300 PYs, and 18,250 PYs for residents of other parts of Canada.

Table 2.5-5 shows the composition of direct construction workforce by construction component and trade. Skilled trades will comprise the majority of the construction workforce, followed by labourers, management and supervisory, and technicians.

Table 2.5-5: Estimated Composition of Project Construction Force

Component	Number (PYs)	Percent of Total (%)	Management & Supervisory	Equipment Operator	Carpenter	Welder /Metal worker	Pipe-fitter	Process specialists	Instrumentation	Electricians	Insulator	Other trades	Labourer
Construction management	5,535	15%	x										
Civil/Supply and erect contracts	5,465	15%		x	x	x						x	x
Hook-up and communications	4,235	12%						x	x				
Piping	3,880	11%				x	x						
Scaffolding	3,340	9%		x	x	x							
Early works	2,455	7%		x	x								x
Electrical	1,705	5%								x			
Site infrastructure	1,315	4%		x	x	x							x
Process equipment	1,220	3%						x					
Marine structures and cooling water	1,065	3%		x		x	x	x		x		x	x
Insulation and painting	1,055	3%									X	x	
LNG tanks	1,005	3%		x		x	x						
Interconnecting pipework	990	3%					x						
Instrumentation (+ misc. supplies)	900	2%							x	x			
RTA port works	870	2%		x		x	x	x		x		x	x
Buildings	750	2%		x	x	x				x	x	x	
Structural	630	2%		x	x	x				x	x	x	
Pipe racks	85	0.2%			x	x						x	
Total	36,500	100%											

Source: Data provided by LNG Canada

Other direct employment will be created locally, elsewhere in BC, and in Canada, because of the manufacturing and provision of goods and services consumed during construction (i.e., satisfying “final demand”). Other workers will be employed to operate the workforce accommodation centre(s), transport materials, equipment, and personnel, provide professional services, or fabricate and supply materials and equipment used during construction. The estimated total amount of direct Canadian employment will be in the range of 56,000 PYs to 64,600 PYs, of which 46% is expected to be hired from within BC.

Table 2.5-6 summarizes the estimated employment for Canadians resulting from construction. It shows that direct construction will provide 29,200 PYs of employment while other direct employment could create between 17,500 PYs and 35,400 PYs of employment. Thus, direct construction will account for between 45% and 63% of the Project's total employment in Canada. The Project is expected to provide between 20,900 PYs and 30,300 PYs of employment for residents of BC, with direct construction employment accounting for between 36% and 52% of the total.

Table 2.5-6: Direct Project Employment for Residents of BC and Canada

	BC		Other Canada		Total Canada	
	Low Estimate (PYs)	High Estimate (PYs)	Low Estimate (PYs)	High Estimate (PYs)	Low Estimate (PYs)	High Estimate (PYs)
Direct Construction	10,950		18,250		29,200	
Other Direct	9,950	19,350	7,550	16,050	17,500	35,400
Total Direct	**20,900**	**30,300**	**25,800**	**34,300**	**46,700**	**64,600**

Sources: LNG Canada, custom runs of SCIPIOM 2014

2.5.4.1.2 Project Purchases of Goods and Services and Indirect Construction Employment

As shown in Table 2.5-7, expenditures on goods and services purchased from BC sources will range from $4.0 billion to $6.5 billion. Of this, between $1.8 billion and $3.1 billion is expected to be procured from businesses in northwest BC. Major items to be purchased from suppliers in northwest BC include various other expenditures, other goods, ready-mix concrete, fuel, and construction services.

Table 2.5-7: Estimated Construction Purchases of Goods and Services in BC

Construction Costs		BC Content		Sourced within BC			
				Northwest BC			Other BC (%)
		Low Estimate ($ millions)	High Estimate ($ millions)	Low Estimate ($ millions)	High Estimate ($ millions)	Percent of BC (%)	
Services	Construction Services	550	880	185	295	33	67
	Professional and Engineering Services	60	90	0	0	0	100
	Transportation (Freight)	250	385	85	130	33	67
	Transportation (Personnel)	200	365	100	185	50	50
	Camps	300	475	150	240	50	50
	Other Services	250	385	85	130	33	67

Construction Costs		BC Content		Sourced within BC			
		Low Estimate ($ millions)	High Estimate ($ millions)	Northwest BC			Other BC (%)
				Low Estimate ($ millions)	High Estimate ($ millions)	Percent of BC (%)	
Goods	Machinery	0	0	0	0	0	0
	Pre-fabricated Structures	85	140	0	0	0	100
	Spare Parts	235	255	65	75	29	71
	Ready-mix Concrete	165	365	165	365	100	0
	Fuel	165	185	165	185	100	0
	Purchased Utilities	0	185	0	185	0	100
	Other Goods	500	770	250	385	50	50
Other Expenditures		525	855	175	285	33	67
Overhead Costs		750	1,210	375	605	50	50
Total		**4,035**	**6,550**	**1,800**	**3,070**	**45**	**55**

NOTE:
Values may not sum to totals shown because of rounding
Source: Data provided by LNG Canada

These purchases will generate indirect employment because of inter-industry purchases through the supply chain. The SCIPIOM modelling results indicate that the purchases of goods and services will create between 10,600 PYs and 17,100 PYs of employment in BC, and an additional 25,900 PYs to 41,100 PYs of employment elsewhere in Canada.

2.5.4.1.3 Induced Construction Employment

Induced economic activity will occur due to spending on goods and services by individuals directly or indirectly employed by the Project. Such induced spending will reflect expenditure patterns by households, which vary between different regions. In BC in 2012, shelter, transportation, food, recreation, household operations, and clothing and accessories accounted for 80% of total household spending (Statistics Canada 2013; CANSIM Table 203-0021). Based on the SCIPIOM results, consumer purchases by workers who are directly or indirectly employed during construction will create 9,300 PYs to 15,000 PYs of induced employment in BC and an additional 17,800 PYs to 28,300 PYs of employment elsewhere in Canada.

2.5.4.1.4 Total Construction Employment

Project construction is expected to create between 110,300 PYs and 166,100 PYs of employment for Canadian residents (Table 2.5-8). Approximately 39% to 42% of total employment will come from direct employment, 33% to 35% from indirect employment, and 25% to 26% from induced employment. Approximately, 38% of total employment in Canada is estimated to occur in BC.

Table 2.5-8: Estimated Construction Employment in BC and Canada

	BC		Other Canada		Total Canada	
	Low Estimate (PYs)	High Estimate (PYs)	Low Estimate (PYs)	High Estimate (PYs)	Low Estimate (PYs)	High Estimate (PYs)
Direct Employment	20,900	30,300	25,800	34,300	46,700	64,600
Indirect Employment	10,600	17,100	25,900	41,100	36,500	58,200
Induced Employment	9,300	15,000	17,800	28,300	27,100	43,300
Total Employment	**40,700**	**62,400**	**69,600**	**103,700**	**110,300**	**166,100**

Source: Custom run of SCIPIOM 2014

2.5.4.1.5 Labour Income, Construction

According to the SCIPIOM, total direct employment income is estimated to be in the range of $3.8 billion to $6.1 billion for residents of Canada who are employed during construction. For residents of BC employed in construction, total labour income is estimated to be in the range of $1.6 billion to $2.6 billion. Based on the estimated direct construction labour requirements provided in Table 2.5-6, the average cost of direct construction labour is estimated to be between $77,600/PY (low cost estimate) to $120,600 per PY (high cost estimate). Table 2.5-9 summarizes the estimated range of wage rates for construction workers. The range of wage rates presented in Table 2.5-9 is based on minimum fair wage rates for federal construction contracts in the island/coast/north zone of BC, as delineated by Statistics Canada and published by Human Resources and Skills Development Canada effective May 15, 2013. Wage rates are for public federal contracts; wages paid by industry often exceed minimum wage rate standards for federal contracts.

Table 2.5-9: Schedule of Wage Rates for Federal Contracts BC, Island/Coast/North Zone (Effective May 15, 2013)

Classification of Labour	Wage Rate Per Hour
Electricians	$30.60
Plumbers	$32.40
Sprinkler system installers	$32.00
Steamfitters and pipefitters	$33.40

Classification of Labour	Wage Rate Per Hour
Sheet metal workers	$30.50
Ironworkers (excluding reinforcing ironworkers)	$32.40
Reinforcing ironworkers (rebar/rodman)	$23.90
Carpenters	$28.20
Bricklayers	$29.50
Concrete finishers	$24.50
Tilesetters (including terrazo and marble)	$27.90
Plasterers and stucco applicators	$25.00
Drywall installers, finishers, lathers and tapers	$26.90
Roofers	$24.10
Glaziers	$26.80
Insulators	$23.80
Painters	$21.10
Floor covering installers	$23.20
Construction millwrights	$35.19
Heavy equipment mechanics	$29.90
Refrigeration and air conditioning mechanics	$35.20
Elevator constructors	$43.79
Mobile crane operators	$34.20
Tower crane operators	$30.18
Straight truck drivers	$26.90
Road tractor drivers of semi-trailers and trailers	$25.90
Heavy equipment operators (excluding cranes, graders and asphalt and paving machines)	$27.40
Grader operators	$27.10
Paving machine and asphalt plant operators	$28.70
Scraper operators	$28.40
Packer (road-roller) operators	$23.40
Pressure vessel welders	$32.50
Traffic control persons	$17.50
Form setters	$23.40
Asphalt layers (by hand - includes rakers)	$25.31
Helpers, labourers (excluding asphalt layers, traffic accommodation persons or form setters)	$18.70
Powder persons and drillers	$29.40
Helpers, labourers with first aid ticket	$19.00

Source: Government of Canada 2013

Estimates of average labour income per PY for other direct, indirect and induced labour are based on the results of the SCIPIOM. These estimates ranged from $54,150 per PY for other direct construction labour in BC, to $59,100 per PY for indirect construction labour in BC, and $45,900 per PY for induced labour in BC. Based on these labour costs and the construction employment estimates in Table 2.5-8, the total labour income in Canada associated with construction is estimated to range from $7.6 billion to $12.1 billion, of which $2.6 billion to $4.3 billion will occur in BC. These estimates are provided in Table 2.5-10.

Table 2.5-10: Estimated Labour Income in BC and Canada during Construction

	BC		Other Canada		Total Canada	
	Low Estimate ($ millions)	High Estimate ($ millions)	Low Estimate ($ millions)	High Estimate ($ millions)	Low Estimate ($ millions)	High Estimate ($ millions)
Direct	1,580	2,560	2,220	3,525	3,800	6,085
Indirect	615	995	1,750	2,770	2,365	3,765
Induced	435	700	965	1,535	1,400	2,235
Total	**2,630**	**4,255**	**4,935**	**7,830**	**7,565**	**12,085**

NOTE:
Values may not sum to totals shown because of rounding
Source: Custom runs of SCIPIOM 2014

2.5.4.2 Operations

2.5.4.2.1 Direct Employment

The Project is estimated to employ between 350 and 450 people to operate trains 1 and 2, and this will increase to between 450 and 800 people once the Project reaches full build-out. An additional 5% to 30% operational staff will be needed during the commissioning and start-up periods, which will commence one year prior to the start-up of each phase, and extend for approximately four years after start-up. The LNG facility will undergo periodic maintenance turnarounds every few years. This will consist of a minor turnaround cycle every three years and a major turnaround cycle every six years. The minor turnarounds require up to 500 additional persons per train for approximately one month, while the major turnarounds will require up to 1,000 additional persons per train for about approximately one month.

It is anticipated that approximately 50% of the operation staff will be full time LNG Canada employees, with the balance consisting of contractors. LNG Canada anticipates that the majority of the operational workforce will be Canadian residents who will be permanently stationed at the LNG Canada facility. Table 2.5-11 provides an estimated breakdown of the operational workforce at full build-out.

Table 2.5-11: Estimated Annual Operations Labour Force

Positions	Number of Positions
Management	30–60
Operations	160–300
Technical Services & Maintenance	200–340
Administration & Other	60–100

Source: LNG Canada

The approximate wages for the various operations positions are not known at this time. However, a study commissioned for the Government of BC (Grant Thornton 2013) noted that project operations would result in high incomes for project workers and assumed average annual compensation of $127,200 for people directly employed on LNG projects, based on estimates provided by the province and its advisors.

In addition to operation staff and contractors working at the Project, some additional direct employment will be created as a result of operational expenditures on goods and services consumed directly by the Project. These purchases are estimated to generate an additional 50 to 400 full-time equivalent (FTE) jobs in BC and from 100 to 300 FTE jobs in Canada[2].

Table 2.5-12 summarizes the estimated direct operational employment associated with the Project. In total, operation will create the equivalent of 500 to 1,200 FTE jobs in BC and between 100 and 300 FTE jobs elsewhere in Canada.

Table 2.5-12: Direct Operational Employment in BC and Canada

	BC		Other Canada		Total Canada	
	Low Estimate (FTE Jobs)	High Estimate(FTE Jobs)	Low Estimate(FTE Jobs)	High Estimate(FTE Jobs)	Low Estimate(FTE Jobs)	High Estimate(FTE Jobs)
Operations workforce	450	800	0	0	450	800
Other Direct	50	400	100	300	150	700
Total Direct	**500**	**1,200**	**100**	**300**	**600**	**1,500**

Sources: LNG Canada, custom runs of SCIPIOM 2014

[2] A full-time equivalent (FTE) job for one year is the equivalent of one person year (PY) of employment

2.5.4.2.2 Project Purchases of Goods and Services and Indirect Employment

The annual value of goods and services needed for operation likely to be purchased from suppliers in BC is estimated to range from $400 million to $945 million. As shown in Table 2.5-13, purchased utilities and repair and maintenance are the two largest costs associated with operation. Between $250 million and $585 million in goods and services is expected to be procured from businesses in northwest BC.

Table 2.5-13: Estimated Annual Purchases of Goods and Services within BC by Commodity and Service

Cost Item	BC Content		Sourced within BC			
			Northwest BC			Other BC (%)
	Low Estimate($ millions)	High Estimate ($ millions)	Low Estimate($ millions)	High Estimate($ millions)	Percent of BC (%)	
Purchased utilities	170	410	140	330	80	20
Repair and Maintenance	145	335	70	165	50	50
Other Services	40	100	15	40	40	60
Overhead Costs	40	100	20	50	50	50
Total	**400**	**945**	**250**	**585**	**62**	**38**

NOTE:
Values may not sum to totals shown because of rounding
Source: Custom runs of SCIPIOM 2014

Indirect employment associated with the purchase of goods and services is estimated using the results of the SCIPIOM run related to Project operational spending in Canada. Table 2.5-14 shows the indirect employment associated with the Project resulting from operating and maintaining the LNG facility and the indirect employment associated with the production and transportation of natural gas. The results show that the indirect employment associated with supplying the natural gas to the facility will account for 78% of indirect employment in BC and 84% of indirect employment in Canada.

Table 2.5-14: Indirect Operational Employment in BC and Canada

	BC		Other Canada		Total Canada	
	Low Estimate (FTE Jobs)	High Estimate (FTE Jobs)	Low Estimate (FTE Jobs)	High Estimate (FTE Jobs)	Low Estimate (FTE Jobs)	High Estimate (FTE Jobs)
Facility Operations	1,900	4,300	500	1,300	2,400	5,600
Gas Supply	6,600	15,400	6,100	14,100	12,700	29,500
Total Employment	**8,500**	**19,700**	**6,600**	**15,400**	**15,100**	**35,100**

Source: Custom runs of SCIPIOM 2014

2.5.4.2.3 Induced Employment

Spending by households with workers directly or indirectly employed by the Project, including those involved with supplying the natural gas to the Project, will create induced employment. Based on the results of the SCIPIOM run, for every 100 direct and indirect job created by the Project, an additional 32 to 38 induced jobs will be created. Total induced employment in Canada is estimated to be between 6,010 FTEs and 13,980 FTEs per year, of which 47% are predicted to occur in BC.

2.5.4.2.4 Total Employment from Operation

Table 2.5-15 summarizes the total direct, indirect and induced employment associated with the operation phase, including employment associated with supplying natural gas to the Project. Annual employment associated with the Project is estimated at 21,700 PYs to 50,500 PYs, of which 55% will be residents of BC. Of the total employment impacts, 58% will be associated with natural gas exploration, production, and transportation in Canada. Over a 25-year operating life, the Project is expected to create from 0.5 million FTEs to 1.3 million FTEs of employment.

Table 2.5-15: Estimated Operational Employment in BC and Canada

	BC		Other Canada		Total Canada	
	Low Estimate (FTE Jobs)	High Estimate (FTE Jobs)	Low Estimate (FTE Jobs)	High Estimate (FTE Jobs)	Low Estimate (FTE Jobs)	High Estimate (FTE Jobs)
Direct Employment	500	1,200	100	300	600	1,500
Indirect Employment	8,500	19,700	6,600	15,400	15,100	35,100
Induced Employment	2,800	6,600	3,200	7,400	6,000	13,900
Total Employment	**11,800**	**27,500**	**9,900**	**23,000**	**21,700**	**50,500**

Source: Custom runs of SCIPIOM 2014

Annual labour income in Canada associated with direct employment during operation is estimated to range from $130 million to $310 million, of which 78% will occur in BC. Estimated annual indirect and induced labour income, based on the results of the SCIPIOM, is listed in Table 2.5-16.

Table 2.5-16: Estimated Annual Labour Income in BC and Canada during Operation

	BC		Other Canada		Total Canada	
	Low Estimate ($ millions)	High Estimate ($ millions)	Low Estimate ($ millions)	High Estimate ($ millions)	Low Estimate ($ millions)	High Estimate ($ millions)
Direct	100	240	30	70	130	310
Indirect	910	2,120	855	1,990	1,765	4,110
Induced	195	455	255	595	450	1,050
Total	**1,205**	**2,815**	**1,140**	**2,650**	**2,350**	**5,465**

NOTE:
Values may not sum to totals shown because of rounding
Source: Custom runs of SCIPIOM 2014

2.5.4.3 Decommissioning

The amount of labour required for decommissioning was estimated using the Project cost information and the results of the SCIPIOM. Numbers for the decommissioning phase are conceptual at this time. As noted in Table 2.5-4, decommissioning is estimated to involve labour costs of between $520 million and $870 million and 67% will be spent to hire workers from BC. It is expected that 50% of BC workers employed on the project will be residents of northwest BC, with the resulting labour income being between $174 million and $291 million.

Purchases of goods and services needed for decommissioning, excluding labour, are estimated to cost between $1.6 billion and $2.3 billion, of which between $1.5 billion and $2.2 billion will be spent in Canada. Of this, about 92% will be spent to purchase goods and services from businesses in BC. Purchases of goods and services from businesses in northwest BC will be in the range of $0.9 billion to $1.3 billion.

Table 2.5-17 summarizes the total direct, indirect, and induced employment associated with decommissioning. Total employment during decommissioning is estimated to be between 10,200 PYs and 15,700 PYs, of which 70% will involve residents of BC. Of the total employment during decommissioning, 47% will be associated with direct employment, 32% will be indirect employment associated with the purchases of goods and services needed for decommissioning, and 21% will be induced employment.

Table 2.5-17: Estimated Decommissioning Employment in BC and Canada

	BC		Other Canada		Total Canada	
	Low Estimate (PYs)	High Estimate (PYs)	Low Estimate (PYs)	High Estimate (PYs)	Low Estimate (PYs)	High Estimate (PYs)
Direct Employment	4,300	6,700	500	700	4,800	7,400
Indirect Employment	1,600	2,300	1,700	2,700	3,300	5,000
Induced Employment	1,300	2,000	800	1,300	2,100	3,300
Total Employment	**7,200**	**11,000**	**3,000**	**4,700**	**10,200**	**15,700**

Source: Custom runs of SCIPIOM 2014

2.5.4.4 Employment Policies and Practices

LNG Canada will take a “hire local first” approach. It will first seek potential employees in northwest BC, then other parts of BC, and finally other parts of Canada. A FEED contractor will manage construction of the facility. Most of the employment and contracting opportunities will be through the FEED contractor, as well as construction contractors. However, LNG Canada is committed to its “hire local first” approach being implemented through the FEED and construction contractors; they will be required to use local labour and businesses, provided they are competitive and meet necessary standards and requirements.

LNG Canada’s selection criteria for suppliers and contractors include, but are not limited to, the following capabilities:

- exemplary and consistent health, safety and environmental performance (HSE)
- ability to deliver consistent product quality service
- demonstrated commercial performance and competitive pricing
- innovative problem solving and ways to maximize efficiency and safety
- proven management systems capability, and
- demonstrated financial capability.

To increase opportunities and benefits for local employment, LNG Canada will also:

- continue to participate in efforts to establish partnerships that support jobs training programs in the community and throughout the province
- communicate the anticipated need and skill level of workers for both the construction and operation phases of the Project, and
- communicate increases and decreases of workforce numbers as early as possible to avoid affecting local communities or businesses.

Additionally, LNG Canada will increase the skills and experience of local area workers by supporting local training centres to develop the skills of the local workforce and, where appropriate, provide access to the necessary environmental, health and safety training required to complete the jobs.

2.5.4.5 Potential to Use Underutilized Resources

Employment during construction and operation phases will help address the relatively high unemployment rates in northwest BC communities, particularly Aboriginal communities. In 2011, the labour force in northwest BC was 19,655 persons, of whom 2,285 were unemployed; this is an unemployment rate of 11.6% (Statistics Canada 2011). The average unemployment rate of Aboriginal communities is much higher than for the regional population as a whole, at 24.3% in 2011.

Unemployed individuals will have numerous employment opportunities once construction commences. Individuals with construction skills and experience will be able to seek positions through LNG Canada's FEED contractor. Other job opportunities will arise within local firms that have been awarded supply or service contracts for the Project. Finally, merchants, hospitality firms, and other service companies will likely need to hire additional staff due to induced economic development within the region.

Given the length of the construction period, there will be opportunities for individuals to develop skills and acquire experience to improve their employability after the Project is constructed. Some skills may be transferable to potential long-term employment when the Project becomes operational.

2.5.5 Government Revenue

2.5.5.1 Construction

During construction, sources of government revenue will include corporate taxes on contractors' profits, income taxes paid by workers directly employed on construction, and sales taxes paid on goods and services purchased from Canadian suppliers. Table 2.5-18 summarizes the expected tax revenues for Canada and BC, based largely on the results of the SCIPIOM. Corporate tax estimates assume a federal corporate tax rate of 15%, and a BC tax rate of 11%, estimated by applying these against the net operating surplus, which is estimated to be 47% of the gross operating surplus, using the SCIPIOM[3]. Personal income taxes are based on SCIPIOM estimates of labour income multiplied by federal and provincial income tax rates.

[3] According to Statistics Canada (2014), the net operating surplus for corporations in Canada accounted for 47% of their gross operating surplus.

Table 2.5-18: Estimated Revenues for BC and Canada during Construction

Government	Revenue Type	Direct		Indirect		Induced		Total	
		Low Estimate ($ millions)	High Estimate ($ millions)	Low Estimate ($ millions)	High Estimate ($ millions)	Low Estimate ($ millions)	High Estimate ($ millions)	Low Estimate ($ millions)	High Estimate ($ millions)
Canada	Corporate income tax	95	155	100	160	100	160	295	475
	Personal income tax	440	700	275	435	160	260	870	1,395
	Sales taxes	5	10	5	5	115	185	125	200
	Other taxes & levies	20	30	10	20	50	85	80	130
	Total	**555**	**895**	**390**	**620**	**430**	**690**	**1,375**	**2,200**
BC	Corporate income tax	25	45	15	25	25	40	70	115
	Personal income tax	65	105	25	40	20	30	110	175
	Sales taxes	20	35	5	10	45	75	75	120
	Other taxes & levies	45	75	15	25	75	120	130	215
	Total	**155**	**260**	**65**	**105**	**165**	**265**	**385**	**625**
Municipal and Regional	Property Tax	94		NE		NE		NE	

NOTE:
NE = not estimated
Values may not sum to totals shown because of rounding
Source: Custom runs of SCIPIOM 2014

Over the construction period, it is estimated that the Government of Canada will receive between $1.4 billion and $2.2 billion, of which 63% will be personal income taxes and 22% will be corporate income taxes, with 9% from sales tax and 6% from other taxes and levies.

Government of BC revenue over the construction period is estimated at between $385 million and $660 million, with 19% from the PST, 18% from corporate income taxes, 28% from personal income taxes, and 34% from other taxes and levies. Municipal government revenue paid by LNG Canada over the construction period is estimated at $94 million. Additional municipal government revenue (not estimated) will be obtained from local taxes paid by in-migrating residents, as well as by business activity induced by the Project. Local governments elsewhere in BC will also obtain additional tax revenue from indirect and induced business activity associated with the Project.

2.5.5.2 Operation

During operation, sources of government revenue will include corporate taxes on profits, income taxes paid by workers directly employed on construction, and sales taxes paid on goods and services purchased from Canadian suppliers. There will also be revenues from the carbon tax levied by BC as well as municipal property taxes. Table 2.5-19 summarizes the expected tax revenues for Canada, BC, and municipal governments, with the estimates based largely on the results of the SCIPIOM. Estimated property, and carbon taxes are provided directly by LNG Canada. Indirect and induced corporate taxes assume a federal corporate tax rate of 15%, a BC tax rate of 11%, and are estimated by applying these against the net operating surplus. Personal income taxes use the SCIPIOM estimates of labour income multiplied by federal and provincial income tax rates.

On an annual basis, the Government of Canada will receive between approximately $630 million and $1.5 billion, excluding corporate income taxes generated by LNG Canada. Revenues from personal income tax will be 43% of the total, while revenue from GST and other federal taxes will be 17% of the total.

Annual revenues for the Government of BC during operation are estimated to be between $690 million and $1.6 billion, excluding taxes on corporate profits generated directly by LNG Canada. About 21% will come from carbon tax payments made by LNG Canada. PST will provide 22% of annual provincial revenues, while personal income taxes will provide 7%, and other provincial taxes and levies will provide 34%.

Table 2.5-19: Estimated Annual Revenues for BC and Canada during Operation

Government	Revenue Type	Direct		Indirect		Induced		Total	
		Low Estimate ($ millions)	High Estimate ($ millions)	Low Estimate ($ millions)	High Estimate ($ millions)	Low Estimate ($ millions)	High Estimate ($ millions)	Low Estimate ($ millions)	High Estimate ($ millions)
Canada	Corporate income tax	NE	NE	220	515	35	80	255	590
	Personal income tax	10	35	140	475	120	120	270	630
	Sales taxes	25	60	20	50	40	85	85	195
	Other taxes & levies	5	10	5	10	15	40	25	60
	Total	**40**	**105**	**390**	**1,045**	**205**	**325**	**635**	**1,475**
BC	Corporate income tax	NE	NE	105	240	10	30	115	270
	Personal income tax	5	10	35	90	10	20	50	115
	Sales taxes	65	145	65	150	20	50	150	345
	Carbon tax	145	330					145	330
	Other taxes & levies	30	65	175	400	35	80	235	545
	Total	**235**	**550**	**375**	**880**	**80**	**175**	**690**	**1,605**
Municipal and Regional	Property Tax	15.0	15.0	NE		NE		NE	

NOTE:
NE = not estimated
Values may not sum to totals shown because of rounding
Source: Custom runs of SCIPIOM 2014

Annual property and other local and regional taxes paid by LNG Canada during operation are estimated to be approximately $15 million per year. While additional municipal government revenue will be obtained from local taxes paid by in-migrating residents and by businesses that provide goods and services for the Project and consumer items for Project workers, this has not been estimated. Local governments elsewhere in BC will also experience additional tax revenue from indirect and induced business activity associated with the Project.

LNG Canada will also generate BC provincial and federal income taxes on taxable corporate income earned over the operations period. The corporate income tax generated directly by LNG Canada is paid byits shareholders. The corporate income tax paid by each owner is dependent on each shareholder's specific tax position and structure within Canada. For that reason, a corporate income tax estimate is not included. As well, legislation on the proposed BC LNG tax has yet to be finalized and this may affect the Project's tax base as well.

2.5.5.3 Decommissioning

The government revenues to be received during the decommissioning phase, based on the results of the SCIPIOM, are summarized in Table 2.5-20. It is estimated that the Government of Canada will receive between $225 million and $340 million in revenues, mostly (62%) coming from personal income taxes.

It is estimated that the Government of BC will receive between $125 million and $180 million in revenue, with 28% from personal income tax and 35% from other taxes and levies. The District of Kitimat will continue to obtain municipal tax revenue while the Project is being decommissioned, as will other local and provincial municipalities, which will benefit from indirect and induced business activity associated with the Project.

Table 2.5-20: Estimated Revenues for BC and Canada during Decommissioning

Government	Revenue Type	Direct		Indirect		Induced		Total	
		Low Estimate ($ millions)	High Estimate ($ millions)	Low Estimate ($ millions)	High Estimate ($ millions)	Low Estimate ($ millions)	High Estimate ($ millions)	Low Estimate ($ millions)	High Estimate ($ millions)
Canada	Corporate income tax	15	25	20	30	15	25	55	80
	Personal income tax	65	100	45	70	25	40	140	210
	Sales taxes	0	0	0	0	20	30	20	30
	Other taxes & levies	5	5	5	5	10	10	15	20
	Total	**85**	**130**	**75**	**105**	**65**	**105**	**225**	**340**
BC	Corporate income tax	10	15	5	5	5	10	25	35
	Personal income tax	20	30	5	10	5	5	35	50
	Sales taxes	10	10	0	5	15	20	25	35
	Other taxes & levies	15	25	5	5	20	30	45	65
	Total	**55**	**80**	**20**	**30**	**45**	**70**	**125**	**180**
Municipal and Regional	Property Tax	NE		NE		NE		NE	

NOTE:
NE = not estimated
Values may not sum to totals shown because of rounding
Source: Custom runs of SCIPIOM 2014

2.5.6 Contribution to BC Economy

Table 2.5-21 summarizes estimates of Project effects on economic output in BC, as measured in terms of Gross Domestic Product (GDP) in terms of basic prices (i.e., less taxes and subsidies"), based on the results of the SCIPIOM. It is estimated that Project-related purchases of labour, goods and services needed for construction would increase GDP in BC by between $4.1 billion and $6.7 billion over the nine-year construction period. Direct Project effects account for 52% of total provincial GDP impacts.

Table 2.5-21: Estimated Impact on Gross Domestic Product in BC

	Construction (Total)		Operation (Annual)		Decommissioning (Total)	
	Low Estimate ($ millions)	High Estimate ($ millions)	Low Estimate ($ millions)	High Estimate ($ millions)	Low Estimate ($ millions)	High Estimate ($ millions)
Direct	2,140	3,530	100	240	735	1,085
Indirect	970	1,560	3,035	7,055	290	420
Induced	1,000	1,620	460	1,065	280	430
Total	**4,110**	**6,715**	**3,595**	**8,360**	**1,310**	**1,930**

NOTE:
Values may not sum to totals shown because of rounding

During operation, the Project is expected to contribute between $3.6 billion and $8.4 billion per year to provincial GDP. Indirect effects, much of which relate to the large amount of natural gas used by the Project, account for 84% of total impacts.

Expenditures undertaken as part of decommissioning will generate between $1.3 billion and $1.9 billion in GDP for the BC economy.

Over the Project life, cumulative GDP effects for BC are estimated to be between $96 billion and $220 billion in nominal dollars.

2.5.7 Contribution to the Canadian Economy

Table 2.5-22 summarizes estimates of Project impacts on GDP in Canada, as measured in terms of basic prices, according the SCIPIOM modelling results. It is estimated that purchases of labour, goods and services needed for construction will increase the GDP in Canada by between $12.2 billion and $19.6 billion over the construction period. Direct project effects account for 43% of the total contribution to national GDP.

Table 2.5-22: Estimated Annual Impact on Gross Domestic Product in Canada

	Construction (Total)		Operation (Annual)		Decommissioning (Total)	
	Low Estimate ($ millions)	High Estimate ($ millions)	Low Estimate ($ millions)	High Estimate ($ millions)	Low Estimate ($ millions)	High Estimate ($ millions)
Direct	5,245	8,470	130	300	825	1,225
Indirect	3,955	6,280	5,120	11,900	740	1,075
Induced	3,035	4,850	985	2,300	485	740
Total	**12,235**	**19,600**	**6,235**	**14,500**	**2,050**	**3,040**

NOTE:
Values may not sum to totals shown because of rounding

During operation, the Project is expected to contribute between $6.2 billion and $14.5 billion per year to the Canadian GDP. Indirect effects account for 82% of total impacts. Expenditures on decommissioning will generate between $2.1 billion and $3.0 billion in GDP for the Canadian economy.

Over the Project life, cumulative GDP effects for Canada are estimated to be between $170 billion and $385 billion in nominal dollars.

2.5.8 Training and Education

Through its social investment program, LNG Canada will work with the provincial government, local industry and training and educational institutions to assess the capability of the local workforce relative to Project requirements. Shortfalls in trade skills already identified include boilermakers, electricians (including industrial, power systems, and high voltage systems), welders and related machine operators, pipefitters, concrete finishers, construction millwrights and industrial mechanics, crane operators, gasfitters, heavy equipment operators and mechanics, insulators, ironworkers and structural metal fabricators and fitters, trades helpers and labourers. To meet procurement standards, the majority of these trades will require both a minimum grade 12 education and certification from appropriate governing bodies (e.g., Inter-Provincial Red Seal, BC Certification of Qualification among others). LNG Canada has already committed to, for example, $60,000 for Trades Opportunity Scholarships to Coast Mountain School District #82, which will be distributed over three years (beginning in 2013).

2.5.9 Contributions by LNG Canada to Community Development

Since 2012, LNG Canada has invested nearly $500,000 into local communities. For example, investments made to date include:

- Trade Opportunity Scholarships ($60,000 over three years beginning in 2013)
- Kitimat Community Foundation ($30,000 over two years)

- Terrace Community Foundation ($30,000 over three years), and
- Emergency response support ($58,500).

LNG Canada will continue to support social investment programs that provide measurable benefits and are financially and operationally sustainable.

2.6 Applicable Authorizations

2.6.1 Provincial Permits and Approvals

The primary regulator for construction and operation of an LNG facility in BC is the OGC, pursuant to OGAA and the Liquefied Natural Gas Facility Regulation.

The OGC is an independent, single-window regulatory agency responsible for overseeing oil and gas operations in BC, including exploration, development, pipeline transportation, and reclamation. Regulatory responsibility is delegated to the OGC through the OGAA and includes specified enactments under the *Forest Act*, *Heritage Conservation Act*, *Land Act*, EMA, and *Water Act*. In addition to coordinating provincial permits and authorizations, the OGC will be the agency responsible for issuing an LNG facility permit for the Project under the OGAA.

Provincial permits, approvals, and authorizations anticipated to be required following issuance of the EAC are:

- permit for construction of the LNG facility under the *Oil and Gas Activities Act*
- water supply system construction permit under section 7 of the *Drinking Water Protection Act*
- water withdrawal (short term) under section 8 of the *Water Act*
- Heritage Investigation Permit under section 14 of the *Heritage Conservation Act*
- fish collection permit under the *Wildlife Act*
- approval (or notification) for a change in and about a stream under section 9 of the *Water Act*
- permit for operation of an LNG facility under the *Oil and Gas Activities Act*
- waste discharge permit for discharge of effluent and air emissions under the *Environmental Management Act*
- water licence to extract water from Kitimat River under the *Water Act,* and
- water supply system operation permit under section 8 of the *Drinking Water Protection Act.*

LNG Canada will not request concurrent permitting under the BCEAA pursuant to the Concurrent Approval Regulation (BC Reg. 371/2002). In October 2013, EAO and OGC signed a Memorandum of Understanding (MOU) regarding reviewable projects that outlines a flexible approach to permitting called synchronous permitting, which is similar to concurrent permitting but does not have legislated decisions or

timelines. It is intended to create timeline efficiencies by allowing the EA and permitting processes to proceed in parallel. LNG Canada intends to follow a synchronous permitting process for provincial permits and approvals.

2.6.2 Federal Permits and Approvals

Key permits, approvals, and authorizations anticipated to be required from the federal government, following the issuance of the EAC for construction and operation of the Project include:

- authorization to carry on a proposed work, undertaking or activity causing serious harm to fish under section 35(2)(b) of the *Fisheries Act*
- permit for disposal at sea under section 127(1) of the *Canadian Environmental Protection Act, 1999*
- approval under section 5(1) of the *Navigation Protection Act* for works in and about navigable water, and
- export licence under section 117 of the *National Energy Board Act*, which was granted on February 4, 2013.

2.6.3 Municipal Permits and Approvals

LNG Canada will adhere to the OCP and zoning amendment applications; building permits and inspections; and the application of provincial Building Code and Municipal Inspection Services. LNG Canada will consult with the district throughout the design stage of the Project regarding components that are subject to district bylaws.